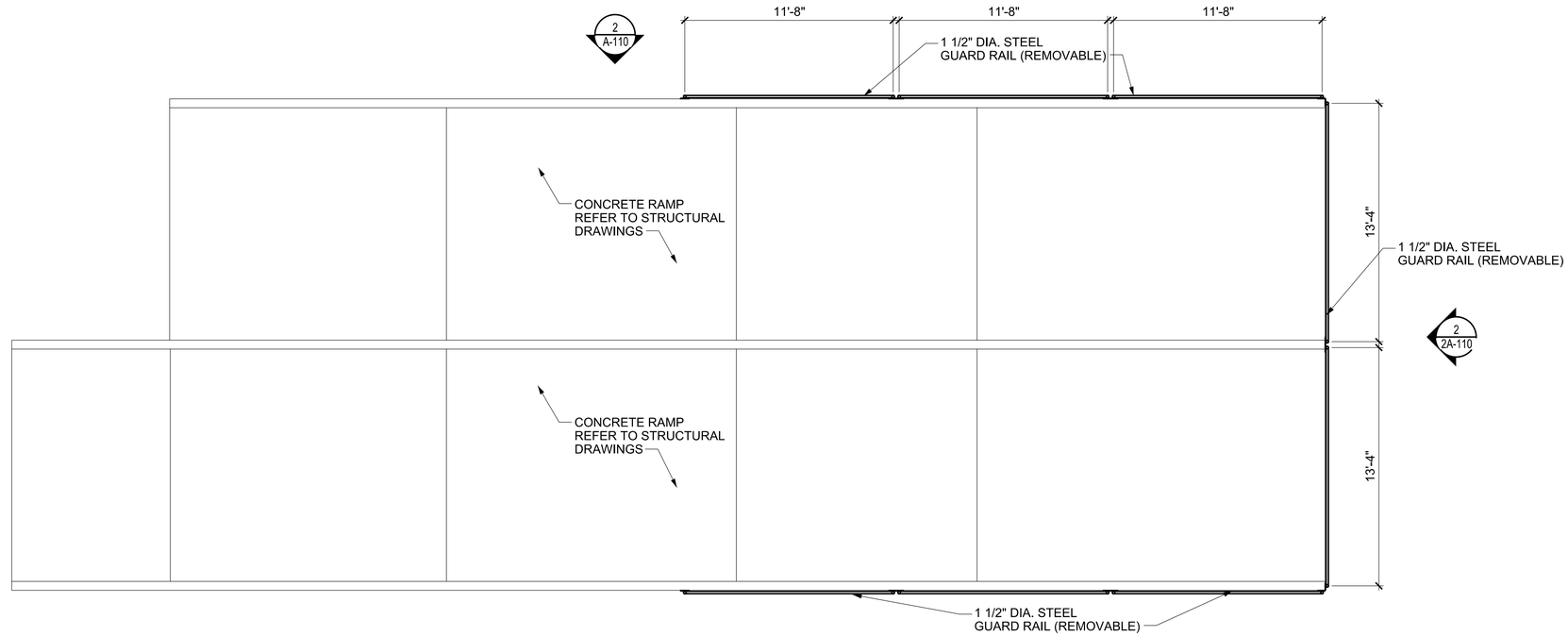

1 A-110 LOADING RAMP PLAN

SCALE: 1/4" = 1'-0"

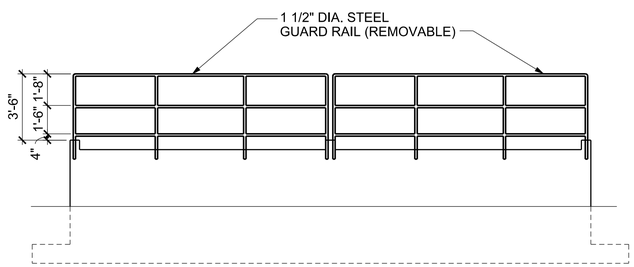

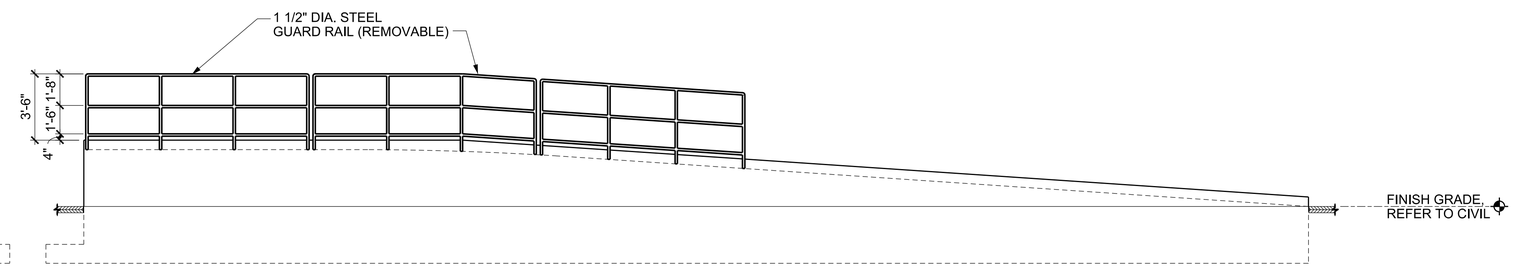

2 A-110 ELEVATION

SCALE: 1/4" = 1'-0"

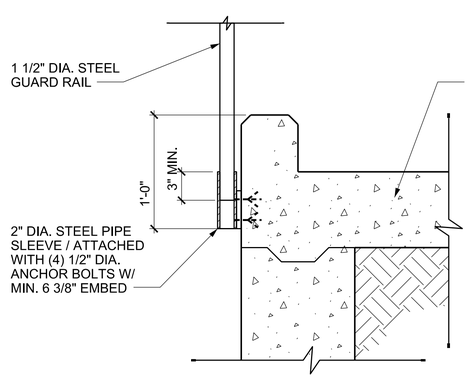

3 A-110 SECTION

SCALE: 1 1/2" = 1'-0"

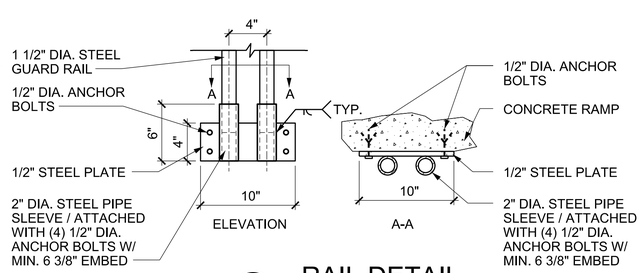

4 A-110 RAIL DETAIL

SCALE: 1 1/2" = 1'-0"

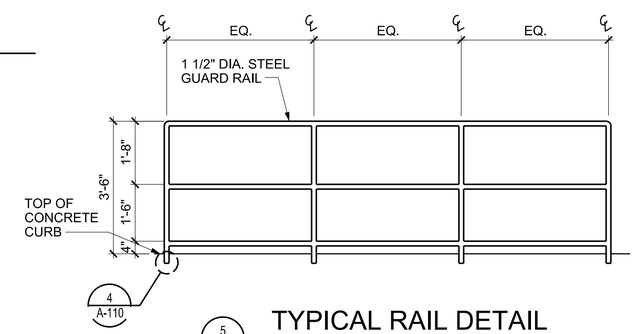

5 A-110 TYPICAL RAIL DETAIL

SCALE: 1/2" = 1'-0"

1' 6" 0 1' 2'
GRAPHIC SCALE: 1½"=1'-0"

2' 1' 0 2' 4' 6'
GRAPHIC SCALE: 1/2"=1'-0"

4' 2' 0 4' 8' 12'
GRAPHIC SCALE: ¼"=1'-0"

US Army Corps of Engineers®
Louisville District

MARK	DESCRIPTION	DATE	APPR.

MARK	DESCRIPTION	DATE	APPR.

U.S. ARMY CORPS OF ENGINEERS
LOUISVILLE DISTRICT
LOUISVILLE, KENTUCKY

DESIGNED BY: | DATE:
DWN BY: | CKD BY: | SOLICITATION NO.:
SUBMITTED BY: | CONTRACT NO.:
PLOT SCALE: 1:1 | PLOT DATE: | FILE NUMBER:
SIZE: ANSI D | FILE NAME:

PROJECT NAME
PROJECT LOCATION
PROJECT #: XXXXX
P2# XXXXXX
LOADING RAMP
CONCEPT FLOOR PLAN

SHEET IDENTIFICATION
5A-110
xx

$FILE$
$DATE$
$TIME$

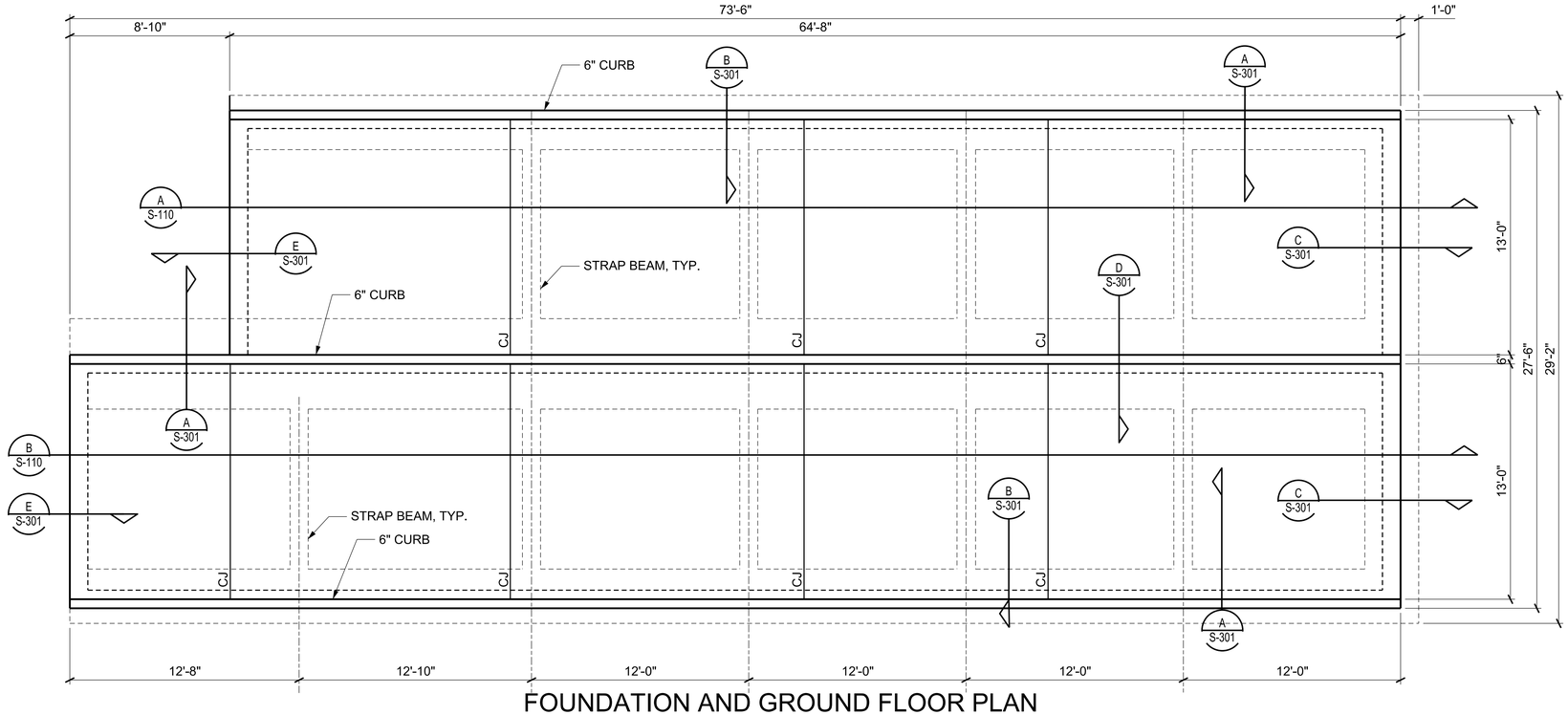

FOUNDATION AND GROUND FLOOR PLAN

SCALE: ¼" = 1'-0"

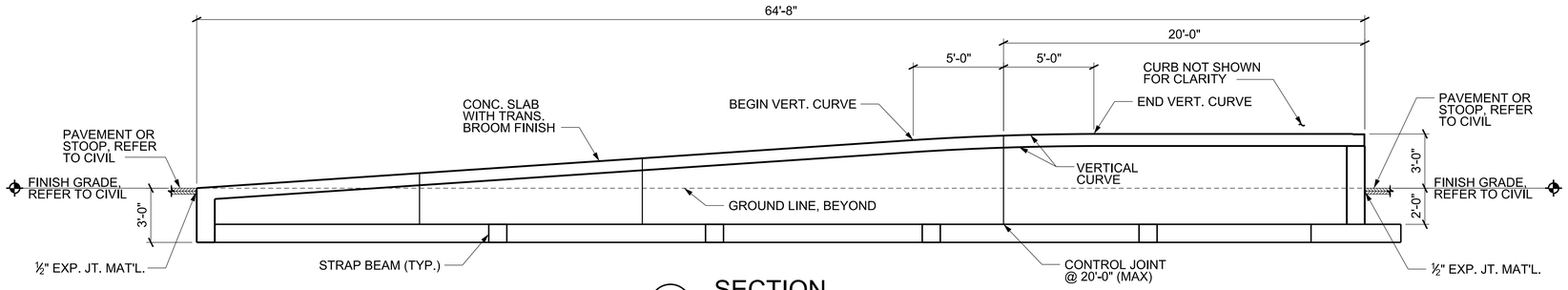

SECTION

A S-110

SCALE: ¼" = 1'-0"

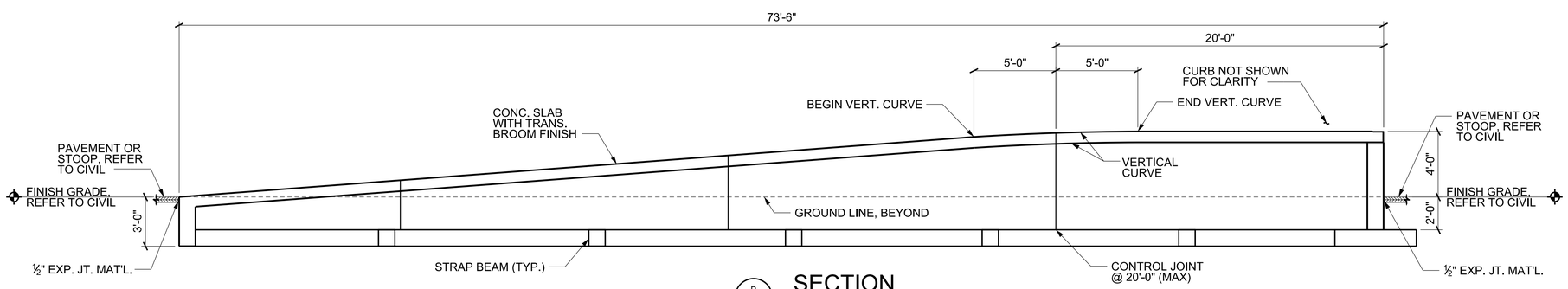

SECTION

B S-110

SCALE: ¼" = 1'-0"

GENERAL NOTES

1. RAMP IS DESIGNED FOR AASHTO HS 20-44 LOADING.
2. 28 DAY CONCRETE COMPRESSIVE STRENGTH, f'c, SHALL BE 4000 psi.
3. REINFORCING STEEL SHALL BE ASTM A615 GRADE 60 DEFORMED BARS.
4. SEE GENERAL NOTES SHEET FOR ADDITIONAL INFORMATION.
5. SEE ARCHITECTURAL DRAWINGS FOR GUARDRAIL LOCATION AND DETAILS.
6. FILL MATERIAL SHALL BE IN ACCORDANCE WITH SPECIFICATIONS, "EXCAVATION, FILLING AND BACK-FILLING FOR BUILDINGS", SECTION 31 00 00.

4' 2' 0 4' 8' 12'

GRAPHIC SCALE: ¼"=1'-0"

US Army Corps of Engineers® Louisville District

MARK	DESCRIPTION	DATE	APPR.	MARK	DESCRIPTION	DATE	APPR.

DESIGNED BY: | DATE: | DWN BY: | CKD BY: | SOLICITATION NO.: | SUBMITTED BY: | CONTRACT NO.: | PLOT SCALE: | PLOT DATE: | FILE NUMBER: | SIZE: ANSI D | FILE NAME:

U.S. ARMY CORPS OF ENGINEERS
LOUISVILLE DISTRICT
LOUISVILLE, KENTUCKY

PROJECT NAME
PROJECT LOCATION
PROJECT #: XXXXX
P2# XXXXXX

LOADING RAMP
LOADING RAMP PLAN AND SECTION

SHEET IDENTIFICATION
S-110

$FILEL$
$DATE$
$TIME$

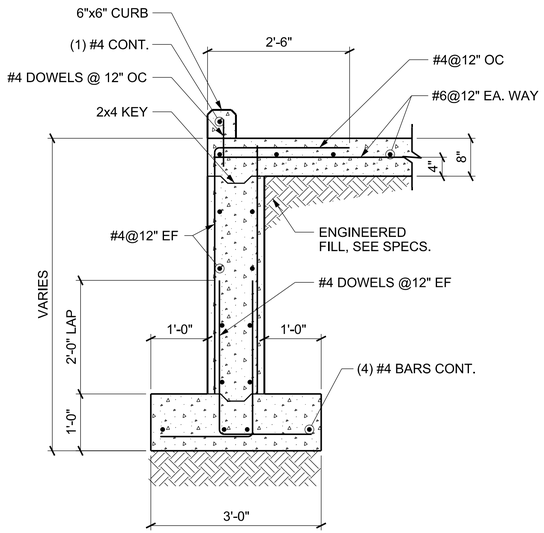

A S-110 SECTION
SCALE: ¾"=1'-0"

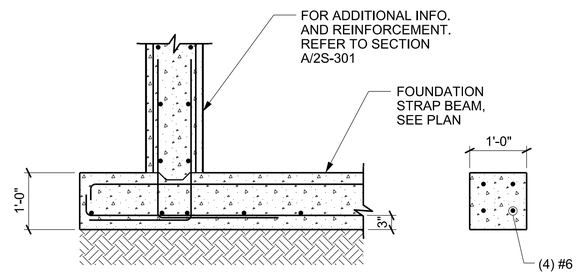

B S-110 SECTION
SCALE: ¾"=1'-0"

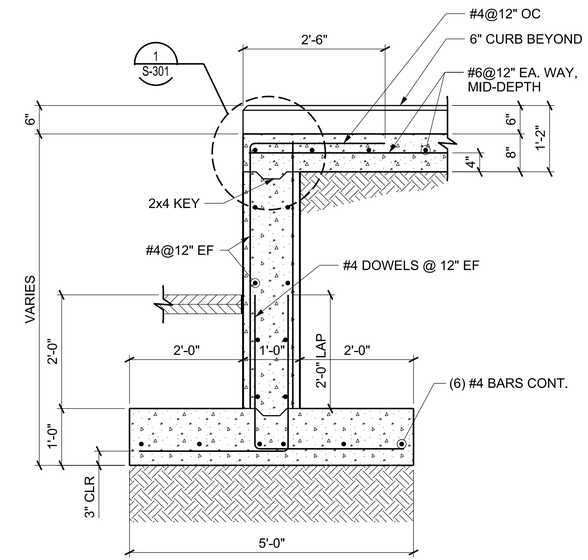

C S-110 SECTION
SCALE: ¾"=1'-0"

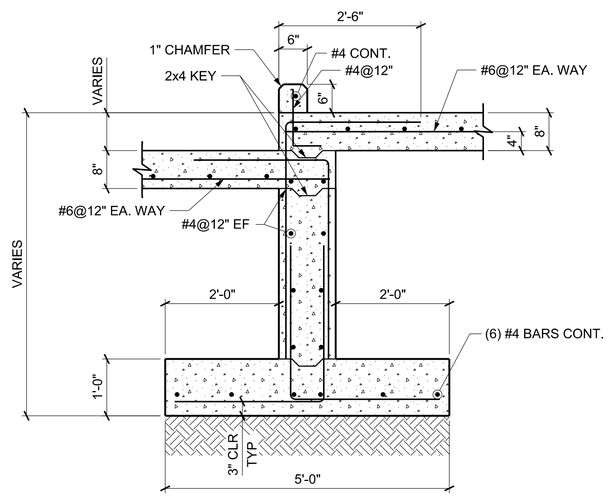

D S-110 SECTION
SCALE: ¾"=1'-0"

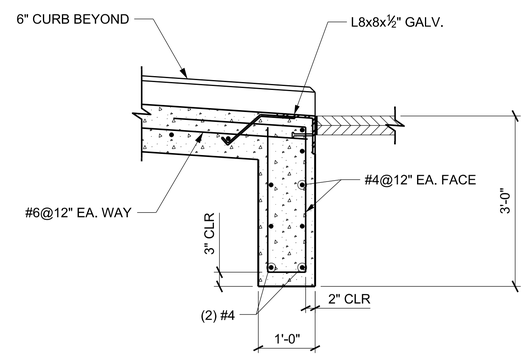

E S-110 SECTION
SCALE: ¾"=1'-0"

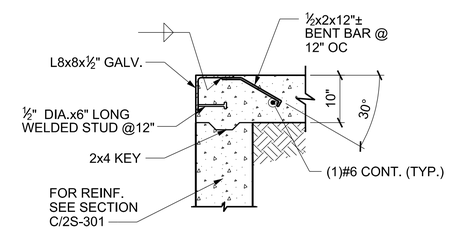

1 S-301 DETAIL
SCALE: 1½"=1'-0"

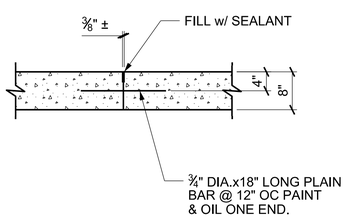

CONSTRUCTION JOINT
SCALE: ¾"=1'-0"

1' 6" 0 1' 2'
GRAPHIC SCALE: 1½"=1'-0"

1' 6" 0 1' 2' 3' 4'
GRAPHIC SCALE: ¾"=1'-0"

US Army Corps of Engineers
Louisville District

MARK	DESCRIPTION	DATE	APPR.	MARK	DESCRIPTION	DATE	APPR.

U.S. ARMY CORPS OF ENGINEERS
LOUISVILLE DISTRICT
LOUISVILLE, KENTUCKY

DESIGNED BY: | DATE:
DWN BY: | CKD BY: | SOLICITATION NO.:
SUBMITTED BY: | CONTRACT NO.:
PLOT SCALE: | PLOT DATE: | FILE NUMBER:
SIZE: ANSI D | FILE NAME:

PROJECT NAME
PROJECT LOCATION
PROJECT #: XXXXX
P2# XXXXXX

LOADING RAMP
LOADING RAMP SECTIONS AND DETAILS

SHEET IDENTIFICATION
S-301

$FILEL$
$DATE$
$TIME$