Pope 'Herky' delivers the goods during 82nd CAPEX...photos on page 3

U.S. Air Force photo by Sally Pender

HERCULES HERALD

Volume 2-Issue 39 | *Serving Spring Lake and Fayetteville, N.C.* | July 31, 1981

PCS mileage, per-diem up

Travel allowances for service members on permanent change of station have been raised for the second time since last summer, according to Base Finance Officials.

As of July 1, rates are 13 cents a mile and $50 per day for PCS moves. Per diem is paid for the number of travel days allowed by the Air Force -- figured on a 300 mile-per-day travel estimate.

Former PCS rates were 7 cents a mile and $35 per day. Dependents' rates remain 7 cents a mile for family members 12 years of age and older and 3.5 cents for those 2 to 12 years of age. No compensation is given for infants.

Part of the travel allowance -- the service member's portion -- can be drawn before the move. The family's allowance and the per diem are drawn upon arrival at the new duty station.

AFROTC
Commissioning chances expand for enlisted

Pope airmen who have been working toward an Air Force commission now have a new opportunity for gold bars, according to base officials.

A recent change to Air Force Regulation 39-10 permits early release from active duty to those who have been accepted into the Air Force ROTC Professional Officer Course.

The POC is an officer preparation course taken during the last two years of the AFROTC college program.

Eligible airmen may have their current enlistment terminated, and be discharged up to 30 days before classes start at the AFROTC-hosted college where they will enter the POC.

The basic requirement for POC entry is to have completed at least two years of college.

There are no restrictions on academic majors, as vacancies exist in all fields. Enlisted members who have already earned a baccalaureate degree are eligible for AFROTC membership if accepted for a two-year graduate program.

"The Air Force and particularly AFROTC, is very interested in active duty airmen," according to Capt. George Strawder, AFROTC advisor.

The Professional Officer Course is offered at over 141 colleges and universities nationwide. In North Carolina the program is taught at Duke University, University of North Carolina, North Carolina State University, East Carolina University, North Carolina Agricultural and Technical State University and Fayetteville State University. Air Force members may apply for admission to the college of their choice and compete for entry into the POC. AFROTC evaluates applicants on several factors, including Scholastic Aptitude and the Air Force Officer Qualifying test results, academic major, and most importantly, the applicant's grade point average. A physical examination and an interview by a board of AFROTC officers completes the application process.

All students in the POC receive $100 per month tax-free. Applicants who are eligible and academically qualified may compete for two-year (junior and senior years) scholarships. These scholarships pay full tuition, laboratory and incidental fees, and reimbursement for required textbooks.

Airmen who qualify for G.I. Bill benefits, or who have participated in the VEAP program may use these entitlements in addition to AFROTC allowances to offset their college and living expenses. In addition, members may also apply for financial aid through the Basic Educational Opportunity Grant program.

Two Pope airmen were selected for the FY 1981 AFROTC (ACSP). They were SrA. Steven K. Stokes, formerly of 1943rd Communications Squadron and SrA. Michael D. Cross, 317th Civil Engineering Squadron.

Captain Strawder will explain application and processing procedures to interested people Aug. 19 between 9 a.m. and 3 p.m. in the Education Center, Bldg. 183. Call Mrs. Gilliard, 394-4691, for an appointment with Captain Strawder.

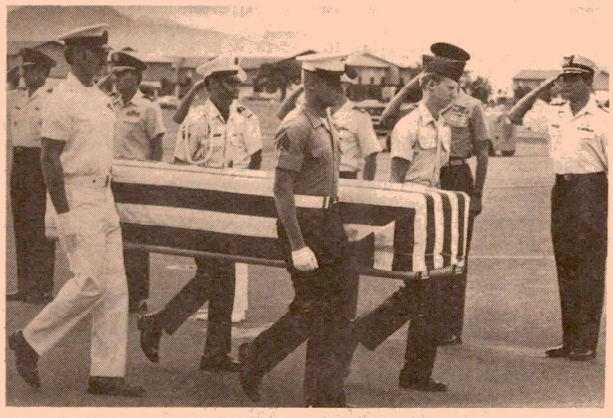

Sgt. Gene R. Huguenin, U.S. Marine Corps; Spec. 4 Christian Gruber, U.S. Army; A1C William Solomon, U.S. Air Force; and Petty Officer 1st Class Steven Riordan, U.S. Navy, carry one of the three caskets containing the remains of three unidentified American service members upon their arrival at Hickam AFB, Hawaii. (U.S. Air Force photo by SSgt. Lono Kollars)

Missing Americans return

By SSgt. Daniel J. Conrad
834th Airlift Division
Hickam AFB, Hawaii

When a Military Airlift Command C-141B Starlifter touched down at the Honolulu International Airport July 8, the Vietnam Conflict finally came to an end for three missing American servicemen.

The Starlifter, assigned to the 63rd Military Airlift Wing at Norton AFB, Calif., carried the remains of the three unidentified American soldiers to Hickam AFB from Clark AB, the Philippines.

About 80 people watched in silence as pallbearers representing each of the U.S. military services carried the flag-draped caskets.

The remains were then taken to the Army's Central Identification Laboratory in Honolulu for processing and positive identification. Names are being withheld until positive identification is made and next of kin are notified.

An 11-man team from the Joint Casualty Resolution Center, Barbers Point NAS, Hawaii, flew to Hanoi July 7 to pick up the remains, which were then transported to Clark AB. The remains were the first to be released by Hanoi since 1978.

The crewmembers are assigned to the 15th Military Airlift Squadron at Norton, and included Capt. James N. Dearien II, 1st Lt. Kolin W. Lester, SSgt. Lawrence A. Smith, SSgt. Ulysses J. Sims Jr., SSgt. Jeffrey R. Odell and Sgt. Javier Tanguma.

Pope AFB—"We put the Air in Airborne"

The *Hercules Herald* is an unofficial newspaper published weekly in the interest of personnel at Pope AFB, N.C. of Military Airlift Command. It is published by the Cumberland Publishing Company, Inc., Hope Mills, N.C., a private firm, in no way connected with the Department of the Air Force. Opinions expressed by publishers and writers herein are their own and are not to be considered an official expression by the Department of the Air Force. The appearance of advertisements, including supplements and inserts, in this publication does not constitute an endorsement by the Department of the Air Force of products or services advertised.

News Briefs

Chief Andrews to become CMSgt. of Air Force

Chief Master Sergeant Arthur L. "Bud" Andrews has been selected the seventh Chief Master Sergeant of the air Force, Air Force Chief of Staff Gen. Lew Allen, Jr., announced in Washington recently. He will assume his new duties Aug. 1, succeeding Chief Master Sergeant of the Air Force James M. McCoy.

Chief Andrews is senior enlisted adviser for Air Force Systems Command at Andrews AFB, Md. In his new duties, health, moral and welfare of Air Force enlisted members.

Chief Andrews, 47, is a native of Boston. He entered the Air Force in January 1953, beginning his career as a security policeman. His career includes assignments to 15 different bases in eight states and four foreign countries.

Senior officer moves

SCOTT AFB, Ill. (MNS) -- Military Airlift Command personnel officials announce the following senior officer moves.

Col. Harold T. Boe, 317th Combat Support Group commander, Pope AFB, N.C., will be director of requirements, Defense Mapping Agency Aerospace Center, St. Louis. he will report in August.

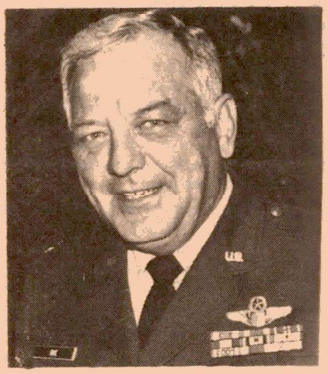

Colonel Boe

Deputy commander of the 60th Air Base Group, Travis AFB, Calif., Col. Jerry Angell, will move to Pope as the 317th CSG commander.

Col. Donald R. Delaney, MAC Operations senior airlift controller, will move to Peru as an air attache in August.

Col. James B. O'Connor, 436th Military Airlift Wing vice commander, Dover AFB, Del., will be Atlantic Command MAC liaison officer, Norfolk, Va., reporting in August.

Col. Paul A. Harvey, 436th ABG commander, Dover AFB, will replace Colonel O'Connor.

Col. Robert J. Svoboda, Naval War College faculty member, Newport, R.I., will command the 436th ABG, reporting in August to replace Colonel Harvey.

Retirement pay

WASHINGTON (AFNS) -- The U.S. Supreme Court decision regarding military retirement pay could significantly affect the rights of military members who are divorced, the Air Force judge advocate general's office announced.

In the recent McCarthy vs McCarthy case, the high court held that military retirement is a member's personal entitlement and is not subject to community property division in divorce.

Military members affected by the decision should be sure their attorney is aware of the decision, officials say. Questions can be addressed to the base judge advocate's office at Ext. 2341.

Zero overpricing program

Would you pay more for an item than what it is worth?

As a taxpayer you are still paying whether from your pocket or through operations and maintenance funds. This makes it essential that you as a customer challenge the price of an item when you have good reason to suspect overpricing. Based on the resulting investigation, you may qualify for an award from the Resource Protection Committee.

If you suspect overpricing, contact the base pricing monitor, Ext. 2331.

Selective reenlistment bonus

Headquarters USAF has authorized payment of all remaining selective reenlistment bonus installments, according to recent reports.

The Air Force Accounting and Finance Center has taken action to include the remaining SRB amounts into members' Aug. 31 regular paychecks. Anyone now receiving annual SRB installment payments and who do not wish to receive a lump-sum payment of their remaining installments, please contact the Accounting and Finance Office immediately. Contact TSgt. Dee Sanders, Ext. 4441.

Bike thefts up

There has been a sharp increase in bicycle thefts lately according to SrA. Kevin Lange, 317th Security Police Squadron.

"Five bicycles have been stolen since the first week of the month," said Airman Lange. "Three of those were stolen in one weekend.

"Every one of those bikes was left unsecured," he added. "If they had been secured, they might not have been stolen."

Airman Lange recommended that all bicycles be registered through Project ID with the security police for identification in case of theft.

He further stressed the importance of always locking the bikes.

"Lock them up no matter if they're under the carport or out by the ball diamond--no matter where. Most of the ones we've had stolen were under the carports just lying there."

HERCULES HERALD

The **Hercules Herald** *is published every Friday. Address all advertising inquiries to Cumberland Publishing Company, P.O. Box 366, Hope Mills, N.C. 28348. Phone (919) 425-4131.*

All new material, stories and pictures, must arrive in 317th TAW Public Affairs Division by noon Monday. The PAO reserves the right to edit all items submitted.

Everything advertised in this publication must be made available for purchase, use or patronage, without regard to race, color, national origin or sex of the purchaser, user or patron. A confirmed violation or rejection of this policy of equal opportunities by an advertiser will result in the refusal to print advertising from that source.

Junior Officer of the Quarter

2nd. Lt. James B. Sadler, 317th Avionics Maintenance Squadron, was recently named Junior Officer of the Quarter for the period April 1 to June 30.

Lieutenant Sadler, a Norfolk, Va. native, has been in the Air Force two years.

In his letter of nomination, 317th AMS Commander Lt. Col Robert Fletcher said, "Lieutenant Sadler is truly the model young Air Force Officer. If public relations experts were looking for the exceptional Air Force image to put on a poster, Lieutenant Jim Sadler would be selected." (U.S. Air Force photo)

Fatalities

Worst rate in nine years

The Military Airlift Command is experiencing its worst fatality rate in nine years, with one death recorded every eight days this year, according to Burt Shannon, MAC chief of Ground Safety.

"This year we've had 24 fatilities," he said. "We're not talking just statistics--we're talking people."

Eight deaths were caused by drowning, an "abnormally high number," according to Shannon.

"We're running higher than we have since 1972," he said.

MAC hit its lowest fatality rate in 1979, when only 19 deaths were recorded. The figure climbed to 33 for 1980, and "if things don't change, 1981 will be the worse," Shannon said.

Private motor vehicle accidents caused the most deaths this year, eight for four-wheeled vehicles and five for motorcycles.

Shannon admits that MAC officials are puzzled by the sudden surge of deaths.

"The only consistent thing we find is that these are inevitably young people, 19-22 years old. In fact, 22 of the 24 dead are under 29," he said.

Alcohol and excessive speed have contributed to some of the vehicle-related deaths. There have also been pedestrian accidents, as well as a few 'freak' accidents where the people who died weren't really doing anything deadly, they just got caught up in an unfortunate chain of events," Shannon said.

MAC Safety offices throughout the command are trying to make people more aware of their personal responsibility for their own safety.

"No amount of safety education can keep people from dying if they don't take care in what they're doing," Shannon said.

"A person leaving the road at 100 mph on a motorcycle won't be saved even if he is wearing a helmet," he said. "Likewise, the person going in the water who can't swim is a likely drowning candidate.

"This problem has received a lot of attention," Shannon said. "We've looked at it factually, statistically and philosophically, and don't see why the figures should be high.

"We don't know why they're happening - we just wish they'd stop."

Brown celebrates 25th anniversary

Ms. Margie Brown recently celebrated her 25th year of service with Morale, Recreation and Welfare at Pope.

Ms. Brown works in the non-appropriated funds financial management branch of MWR.

At a small party in her honor, Ms. Brown was presented with a gold watch for 25 years of loyal service.

"I love my job," said the North Carolina native. "It is challenging and there is always something going on."

Army neighbors flex muscles

Pope people watched their Fort Bragg neighbors flex their military muscles recently during the annual two-day capabilities exercise and firepower demonstration. The demonstration was staged by the 82nd Airborne Division with airlift support provided by the 317th Tactical Airlift Wing. ABOVE-- An Army UH-60A Blackhawk flies over the "battlefield" at Fort Bragg's Observation Post 5 during the firepower demonstration. BOTTOM LEFT-- An 82nd Airborne Division gun crew springs to action during firing of their 105mm Howitzer. BOTTOM RIGHT-- A trio of division troopers race up a hill past foxholes while shells pound the earth behind them. Soldier on right has a Light Anti-Tank Weapon (LAW) strapped to his back. (U.S. Air Force photos by 1st Lt. Brian P. Hoey)

DOPMA: Effects on reserve officers

RANDOLPH AFB, Texas (AFNS) -- One of the key features of the Defense Officer Personnel Management Act is the single promotion system, which becomes effective Sept. 15.

Although most reserve officers should note few changes in the promotion area, some actions are required to transition from the dual temporary and permanent systems to the new one.

Reserve officers serving in a temporary grade higher than their permanent grade will have their permanent grade and date of rank adjusted to coincide with their temporary grade and date of rank Sept. 15, 1981, or as soon thereafter as Senate confirmation is obtained.

For example, a temporary major with a May 4, 1981, date of rank holding the permanent grade of captain, will have his or her permanent grade changed to major with a May 4, 1981, date of rank.

If the individual is a temporary major and holds the rank of permanent major under the Reserve Officer Personnel Act system, the permanent grade and date of rank will be adjusted to agree with the temporary grade and date of rank.

A temporary captain holding a ROPA permanent grade of major will continue to serve on active duty as a temporary captain and will continue to be eligible for active-duty promotion to major. This officer will still be able to retire in the grade of major, even if not selected for major on active duty.

Captains on the selection list for temporary major will assume the rank of major on the effective date of the promotion, and the permanent grade and date of rank will then be changed to agree with the temporary grade and date of rank.

Captains who have once failed selection for temporary major will meet the next scheduled major selection board. If they are not selected by that board, they will be retired -- if eligible -- separated or continued on active duty to meet Air Force needs.

Reserve captains once failed for promotion to permanent ROPA major will meet the next scheduled ROPA major board. If selected for permanent promotion by the second board, the officer will be continued on active duty and remain eligible for active-duty promotion.

However, the officer will not be eligible to retire in the higher reserve grade unless subsequently selected for active-duty promotion to the higher grade, since the selection will have been made after DOPMA implementation.

Reserve captains who are twice failed for promotion to ROPA major will be retired -- if eligible -- or separated. These officers are not eligible for continuation under reserve law.

Reserve lieutenant colonels and reserve majors who have not failed promotion to the next higher grade will be considered for regular appointment by a "catch-up board" convened at the Air Force Manpower and Personnel Center here.

The board will consider officers for regular augmentation on a fully qualified basis, thus, all eligibles could potentially be offered regular commissions.

Reserve majors accepting regular commissions as a result of this board will be allowed by policy to remain on active duty until eligible to retire even if not selected for further promotion, with possible continuation of 24 years of service.

Reserve lieutenant colonels who accept regular commissions will be granted 28 years' tenure by law.

At the present time, these reserve officers normally would retire after 20 years of active service.

Augmentation programs under DOPMA will essentially be the same as now.

All new officers, except academy graduates, will be appointed as reserve officers.

Consideration points for regular commissions will be upon selection to captain and after five- and seven-years' service. Promotion to the field grades will result in an automatic tender of a regular commission.

Officers will not be forced to accept a regular appointment in order to remain on active duty.

However, as reserve officers they have no statutory tenure and serve on active duty according to Air Force policy.

Reserve majors who have failed temporary promotion to lieutenant colonel once or twice will, by policy, be allowed to remain on active duty until eligible to retire. They will continue to compete for promotions and, if selected, will be offered a regular commission.

The promotion phase points under DOPMA will remain basically the same as the current temporary system. All promotions under DOPMA will, however, be permanent promotions.

Around Pope last week

Some of the activities around Pope last week weren't directly related to the base's airlift mission. About 70 airmen and officers boarded a C-130 Hercules (left) and flew to Wright-Patterson AFB, Ohio July 25 to tour the Air Force Museum. The museum trip is organized monthly by the 317th Tactical Airlift Wing Public Affairs Office as a morale and retention booster for the base's military members. Many children who had been taking part in the Base Library's summer reading program celebrated an early Christmas (right) on the last day of the program, July 23. The children made decorations and hung them on a stylized Christmas tree. (U.S. Air Force photos by Sally Pender and Laura Carlson)

MAC family conference scheduled

WASHINGTON (AFNS)--The 1981 Air Force Family Conference--named "Family Focus-Phase II"--will be hosted at Bolling AFB, D.C., Sept. 17-18. Base level family members, single-member parents, married military couples, single members and Air Force Headquarters and major air command representatives will attend.

Sponsored by the Air Force Family Matters Office, the conference will provide a forum for family members to review the Air Force family action plan for the '80s and to strengthen Air Force family programs.

Attendees will deal with issues vital to Air Force families and the Air Force mission.

The conference agenda will include panel discussions, speakers and delegate discussion groups. A one-half day session is being developed to address "Challenges for the Air Force families in the '80s" which would include family coping skills, dual-career families and the role and identify of Air Force spouses.

Keynote speakers will include Secretary of the Air Force Verne Orr.

BRING A RAY OF SUNSHINE TO SOMEONE SPECIAL TODAY AND SURPRISE THEM WITH A LOVELY SUMMER BOUQUET!

special on carnations

$5.00 FOR 1 DOZEN — Roses - $2.00 A Stem

SKYLAND FLORIST

115 Skyland Plaza Spring Lake 497-3250

SALESPERSON NEEDED!

MUST BE AGGRESSIVE AND NEAT IN APPEARANCE IF INTERESTED CALL

425-4131 or 424-4670

Tar Heel Farmer Market

1516 HWY 87 NORTH

OPEN 7 DAYS A WEEK

Mon — Sat - 10 a.m.-9 p.m. Sun 12 Noon-9 p.m.

LETTUCE HEAD 39¢ — TOMATOES lb. 39¢

THIS WEEK'S SPECIAL

10 lbs. POTATOES — $1.49

Valid July 31 thru August 6

Just when you need us most, we're HERE!

JIFFY LUBE

Supreme Quality PENNZOIL Safe Lubrication

JIFFY LUBE®

10 MINUTE SERVICE

No appointment needed.

Jiffy Lube: the fast, simple way to get necessary maintenance for your car by specialists! Includes: ☐ 5 quarts oil ☐ oil filter ☐ chassis lube ☐ check and top off all fluid levels free ☐ vacuum interior ☐ check tire pressure ☐ all for $17.95!

FREE CAR WASH! including

Monday through Saturday, 8:00 am - 6:00 pm

3816 Raeford Road, Fayetteville

JIFFY LUBE. NOW THAT YOU NEED US, WE'RE HERE!

Is this your week for a $5 discount?

Business or ID card Required.

Tuesday: Army personnel Wednesday: Air Force personnel

WEDDING SPECIAL

Book Your Wedding With Us During the Month of July and August and Receive This Special Offer:

Bridal Bouquet
1 Attendent's Bouquet
2 Church Arrangements
2 Mother's Corsages
3 Boutonnieres

$89.95

"FLOWERS FOR ALL OCCASIONS"

Bordeaux Florist

BORDEAUX SHOPPING CENTER
FAYETTEVILLE, N.C.

485-4158

VISA FTD MasterCard

In MAC tourney

Pope women take third place

By SrA Tanya Lairamore

The Pope Women's slowpitch softball team came home from Norton AFB, Calif., this week after having placed third out of 13 teams entered in the Military Airlift Command Women's Slowpitch Softball Championship at Norton AFB, Calif.

Representing Pope in the tournament were Kathy Vann, Julie Swain, Julia Holcumn, Jacqueline Buffet, Brenda Ness, Donna Rickey, Nancy Mason, Nancy Klein, Denise Johnke, Gloria Kuhn, Debbie Costin, Angela Chaterson and Maggie Coats. Coaches for the team are A1C Larry Reynolds and Sgt. Tom Bralley.

Pope Falcons were strong from the beginning of the tournament. They went up against Altus AFB, Okla. for their first game in the series, July 14, and won 24-2. The following day the Falcons beat Travis AFB, 5-4.

Thursday, Kirkland AFB, beat the Falcons, 6-2, but the Pope women turned around that night to beat Dover AFB, 9-8. That game had a surprising twist when the Falcons made a comeback in the seventh inning. The Falcons were down 8-2 in the top of the seventh when they surged ahead to win with a final score of 9-8.

Friday morning, in the game that would decide which team would face Charleston AFB, S.C. in the losers bracket final, Pope dominated Travis from the second inning on as they scored only in three big innings to take an easy 16-1 decision from Travis.

Pope scored four second inning runs on singles by Jacqueline Buffett and Gloria Kuhn. They added seven more in the third inning as Kathy Vann, Nancy Klein, Debbie Costin and Denise Johnke all picked up run scoring singles in the outburst.

Costin, Johnke, Mason and Ness all picked up RBI hits in the sixth inning for Pope as they cruised to a 16-1 win.

That night Pope faced Charleston in the losers bracket final. The Charleston Hurricanes jumped out to a quick 5-0 lead over Pope with an RBI triple and three RBI singles in the first inning.

They added four more in the second inning with a bases-loaded single to score two runs and two RBI singles for a Charleston lead.

Pope scored two lone runs in the fourth inning on RBI singles by Donna Rickey and Jacqueline Buffet to cut the lead to 9-2. A solo homer led the sixth inning for Charleston to win the finals of the losers bracket by a 10-2 score.

Charleston went on to lose 6-5 to the Kirtland AFB Flyers in the final game of the tournament.

"The girls did their best," said Larry Reynolds. "They put out their 110 percent.

"I gotta say I had my doubts at the first of the season, but the women proved me wrong," he added. "They jelled at the right time."

Reynolds, a member of the base gym staff also commented, "I feel like this win is going to really do the women's athletic program wonders. It's going to give the women's program something to build on."

Sports shorts

Bowling meeting

There will be an intramural bowling meeting Aug. 21 at 1:30 p.m. in the Pope Lanes conference room. Letters of intent must be turned in to the lanes by Aug. 18.

New equipment

A hydro-gym, a new type of exercise equipment, is being installed at the Base Gym next week. Free demonstrations will be given after the installation is completed.

Bowling tourney

A bowling tournament will be Aug. 15-16 at the Pope Lanes. More information will be given later.

Softball tournament

A softball tournament for the American and National leagues begins Aug. 10.

Willow Lakes Golf Championship

The Willow Lakes Golf Course Championship concluded July 12.

When the dust had cleared the following golfers came out on top:

Championship Flight	Two day total
1. F. Gross	140
2. J.W. Smith	148
3. B.J. Thompson	150
First Flight	
1. B. Magee	158 (Won in a playoff)
2. M. McKeller	158
3. B. Childers	159
Second Flight	
1. C.W. Walker	166 (Won in a playoff)
2. D. Parent	166
3. J. Dennison	167
Third Flight	
1. W.K. Johnson	177
2. T. Dibert	178
3. E. Spoitti	179
Fourth Flight	
1. H. Jones	186
2. M. Watson	188
3. J. Spradlin	190
Fifth Flight	
1. J. Wingard	204
2. R. Reese	206
3. D. Larson	208

A & P THRIFT SHOP

Specializing in New & Used Furniture & Appliances

BRAND NEW FREEZERS
At Low -- Low Prices
Various Sizes in Stock
NOW IS THE TIME TO BUY!!!

7 PIECE LIVING ROOM SET
With 80" Sofa and Man-Sized Comfortable, Durable Chair & Rocker Plus Ottoman, etc.
Selling For $800 and More
OUR PRICE ONLY..... $399.95

	Reg. Price	SALE
Recliners (Wall huggers)	429.95	149.95
Bunk Beds complete	239.95	179.95

New Mattress Sets Starting from $69.95
New and Used Refrigerators - $175. Freezers starting at $110 and up
Used washers & dryers starting at $135 and up
New & Used gas & electric ranges from $185 and up
2-Piece Living Room Suit starting at $139.95 and up
9-Piece Dining Room-Solid Pine Table, 2 Leafs, 6 Mates Chairs - $279.95

THE BEST PRICES AROUND—COME SEE YOURSELF
$100.00 OFF NOW ON LAY-A-WAY
ANY FREE—STANDING STOVE OR FIREPLACE INSERT
NO FINANCE CHARGES

LOCATED JUST OFF HWY 301 S. ON SANDER ST.
BEHIND THE BROOKLYN TRAILER PARK
CALL US OR COME BY FOR GREAT
SAVINGS ON FURNITURE & APPLIANCES

HOURS: Thurs, Fri & Sat 1—9 p.m.

If You Can't Find Us, Just Call 424-2611

Here's A Going-Away Present: 50% Off The Air Fare.

A valid green military ID allows you 50% off regular fares on Piedmont flights to the following cities: Asheville, Charleston, SC, Atlanta, Boston, Charleston, WV, Charlotte, Charlottesville, Chicago, Cincinnati, Dallas/Ft. Worth, Greensboro/High Point/Winston-Salem, Denver, Fayetteville, Huntington, Philadelphia, Houston, Kinston, Knoxville, LaGuardia, Lexington, Louisville, Lynchburg, Memphis, Miami, Myrtle Beach, Nashville, Newark, Orlando, Pittsburgh, Richmond, Washington, DC, Wilmington, Roanoke, Tampa, Tri-Cities.

PIEDMONT AIRLINES

For more information, call your SATO or call Piedmont.

3 DAYS ONLY

FREE BALLOONS

FREE COKES

3 DAYS ONLY

TRUCKLOAD
BEDDING SALE
BUY DIRECT FROM
BEMCO'S TRUCK
½ PRICE

GREAT SHOW OF SAVINGS

Whirlpool
HOME APPLIANCES

Model
LHB 3000
Convenient
24" Width

$279

• 2 Automatic Cycles • SURGILATOR Agitator • Energy Saving Water Temp Selector • 2 Wash & 2 Spin speeds • Easy-Clean Lint Filter removes easily

RCA SPECIALS

Model GER 684
25" Diagonal
Color TV

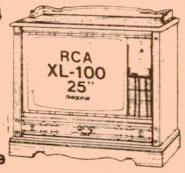

$528

Every RCA TV
Sale Priced
Check Our Price
Before You Buy

SHOP UNDER OUR TENTS & IN OUR TRUCKS FOR UNHEARD OF VALUES

THURS/FRI/SATURDAY

Everything in the Store IS ON SALE!

Whirlpool Range
RFE 3550 Deluxe
Reg $599.95
$299

Whirlpool Range
Model RFE 395P
Reg $699.95
$349

'Great Room'! Great Buy!

Real casual, carefree comfort, solidly built with sturdy OAK frames, bolted to PROVINCIAL PINE

Sofa, Chair, Rocker, Ottoman,
3 Tables & 2 Lamps
Reg. $859.95

SALE $449

5—Piece Dinette
$98

7-Piece Dinette
$138

Bemco Bedding
½ Price

Whirlpool - RFE 3550 - Reg. $699.95
$299.95

RFE 396 - Reg. $799.95
$349

LHB 3000 Washer
$258

$1,000
INSTANT
CREDIT

FURNITURE &
APPLIANCE DIST.
3615 SYCAMORE DAIRY ROAD
864-2110

IN STORE
FINANCING
ON A LIMITED
BASIS

CLASSIFIED ADS

Everything advertised in this publication must be made available for purchase use or patronage without regard to race, creed, color, sex or national origin of the purchaser user or patron. A confirmed violation or rejection of this policy of equal opportunities by an advertiser will result in the refusal to print advertising from that source. Payment of $1.50 per item must accompany classified ad and mailed to: Cumberland Publishing Company, P.O. Box 366, Hope Mills, N.C. 28348.

FOR RENT: Family Bargain - near Hwy 210 and Manchester Rd. - nice 4-bedroom, all electric, air cond., carpet, refrig. & stove, fenced - $245 (9233A) **Rental Locators - 484-2193.**

FOR RENT: Holly Hills near Bases - Brick veneer house - 3-bedroom, air cond, appls., washer, dryer, 3 baths, fenced for kids, pets, carport - $265 month (7311A) **Rental Locators - 484-2193.**

FOR RENT: Spring Lake area - 3-bedroom, furn. trailer, Air Cond., carpet, washer - 3 baths - kids fine - ready today - $140 month (7001A) **Rental Locators - 484-2193.**

FOR RENT: Close to Black & Decker - Brick veneer, 4-bedroom house, dining room, stove, dishwasher, 2 baths, air cond., fenced for kids and pets - $265 per month. (7331H) **Rental Locators - 484-2193**

FOR RENT: Near Hope Mills off I-95 - 3-bedroom house, children, pets fine - Laundry room - available today - $150 month - (8853H) **Rental Locators - 484-2193.**

FOR RENT: Cliffdale Rd. area - Handyman special - 3-bedroom house - electric baseboard heat - fenced for kids and pets, carport - $185 month - (8543H) **Rental Locators - 484-2193.**

FOR RENT: Raeford Rd. area - 3-bedroom house, den, air cond., carpet, new paint - kids, pets, fine - only $200 month - (8711H) **Rental Locators - 484-2193.**

FOR RENT: Between Fayetteville and Hope Mills, completely furnished apartment, air cond., w/CARPET, WATER & garbage pick-up - $145 month (7741H) **Rental Locators - 484-2193.**

FOR RENT: Just outside Spring Lake - 3-bedroom furnished house, carpeted, 2 rooms newly paneled, kids, pets o.k. - $150 month (8253A) **Rental Locators - 484-2193.**

FOR RENT: Spring Lake, off Hwy. 87N - 2-bedroom house, furnished, air cond., carpet - kids fine - ready today - $140 month -(7551A) **Rental Locators - 484-2193.**

FOR RENT: Close to Pope AFB - 2-bedroom house, appliances - kids, pets, fine - cable - better hurry! only $125 month (7141A) **Rental Locators - 484-2193.**

FOR RENT: Behind Skyland Shopping Center - 2-bedroom, completely furn. house - kids, pet fine - $175 month (9212A) **Rental Locators - 484-2193.**

PREVENT Cold Sores & Fever Blisters forever - Amazing New Product - Send $3.00 for details to: **Good Health, P.O. Box 132, Hope Mills, N.C. 28348.**

FOR SALE: King size "Country Boy" water bed - Complete w/thermostat, heater, mattress; need to make room for new baby - $300. Call **497-7439.**

FOR SALE: Stereo/entertainment table - solid hardwood blonde finish - very sturday - $40 - B&W Portable TV - 9" - excellent condition - $40. Call **497-7439.**

SUPERIOR TRUCK & VAN SALES

The One & Only Truck & Van Lot On Bragg Blvd.

4113 Bragg Boulevard

867-5127 or 868-5126

75 Chevy 3-Ton, Automatic Power Steering, Power Brakes, AM/FM Tape ..... $500.00 Down

76 Chevy Van - 6 cyl., 3 speed AM/FM Stero Tape, Short Bed ..... $550.00 Down

78 Ford F100 - Att. Trans, 6 cyl. AM/FM Radio - CLEAN! ..... $600.00 Down

77 Dodge D-100, With Camper Shell, 28,000 Miles ..... $500.00 Down

77 Ford, 6-Cyl., 3-Speed (Real Clean) ..... $500.00 Down

68 Chevy Fletside, 3-Speed, AM/FM Stero Tape ..... $400.00 Down

BUY Your next TRUCK Or VAN At SUPERIOR!

It's like opening a SAVINGS ACCOUNT!

THE PRICES ARE THE LOWEST

For More Information, Call Troy or Roy

C & C Top Shop, Inc.

CHARLES CRUMPLER, Owner

OPEN
MON. - FRI., 8 AM - 6 PM
SAT., BY APPOINTMENT ONLY

488-0066

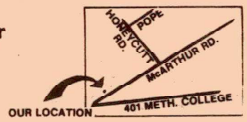

T-TOPS
FOR MOST CARS

Sun Roofs
ON ANY CAR
SUNROOF SPECIAL

Specializing In Installing & Repairing Vinyl Tops

Prices $189.00 and up

421 McArthur Rd.

Body Side Moulding
All Types of Striping

WE MAKE OLD CARS LOOK NEW AGAIN!

The Centennial Fan SALE

- DIRECT DRIVE MAINTENANCE FREE MOTOR
- ALL METAL HOUSING
- VARIABLE SPEED CONTROL
- Made in North Carolina

Available in 36 In. and 52 In.

Centennial Fans as low as $168.00

FANS AS LOW AS $89.00

BIG SAVINGS AND YEARS OF ENERGY SAVING COMFORT (LIGHT KITS OPTIONAL) • INSTALLATION AVAILABLE

Ceiling Fan Center

OPEN TUES.-FRI. 10:30 to 6:30

2625 RAEFORD ROAD
Across from Woolco
484-1950

OPEN SATURDAY 10 to 5

master charge VISA

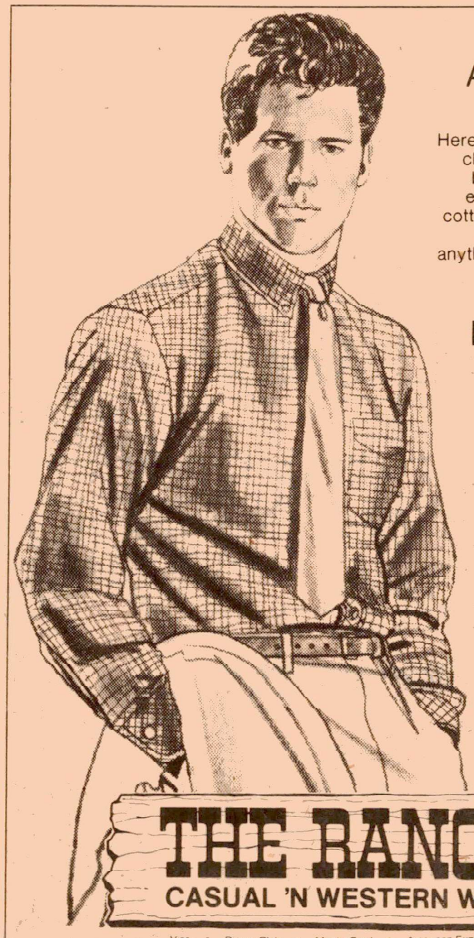

An American Classic

Here is the updated oxford cloth with the traditional button down collar. An easy care blend of poly cotton in tattersalls, solids or stripes to go with anything in your wardrobe. S-M-L-XL. $19.

BonHomme

CROSS CREEK MALL

THE RANCH
CASUAL 'N WESTERN WEAR

Visa • Diners Club • MasterCard • American Express

Local Happenings

Cinema Schedule

Tonight: Blazing Saddles (R) 7:30 p.m.

Tomorrow: Jack & the Beanstalk (G) 2 p.m.; Sphinx (PG) 7:30 p.m.

Sunday and Monday: Excalibur (R) 7:30 p.m.

Tuesday: Smokey & the Bandit II (PG) 7:30 p.m.

Wednesday: The Exterminator (R) 7:30 p.m.

Thursday: Caveman (PG) 7:30 p.m.

NCO Club

Tonight and Tomorrow: Variety band "Easy" will play from 9 p.m.-1 a.m. Disco with Jumpin Sunny from 9 p.m.-1 a.m. in the Fox & Hound.

Sunday: Membership appreciation buffet from 1-5 p.m. Member can bring date or spouse free. Small charge for guests and children over two.

Monday: Bingo at 7 p.m. Pinochle tournament at 6:30 p.m. Free nursery service provided.

Tuesday: Disco with Jumpin Sunny from 8 p.m.-midnight.

Wednesday: Western disco from 8 p.m.-midnight.

Thursday: Jumpin Sunny and his Musical Trio play from 9 p.m.-1 a.m.

Youth Center

Tonight: Pre-teens sock hop from 7-9:30 p.m.

Tomorrow: Open for teens from 7-10 p.m.

Monday: At the movies, 3:30-5 p.m.

Tuesday: Karate lessons, 6:30-8 p.m.

Wednesday: Square dance instruction 7-10 p.m.

Football registration is still underway at the Youth Center. Come by the center or call Ext. 4512 for more information.

Rec Center

Tonight: Risk competition begins at 7 p.m. Prizes will be awarded to winners.

Last chance for July to sign up for a free ticket on the prize of the month, a personalized Herky Bird cartoon.

Tomorrow: Table game day.

Sunday: Character generation for Dungeons & Dragons at 1 p.m.

Monday: Free dance with live band Second Helping from 8 p.m.-midnight. Bar service will be available. Prize of the month drawing will be held.

Tuesday: Class night. Guitar and Jazz dance starts at 6 p.m. Drama classes at 7 p.m.

Wednesday: Newcomers orientation begins 7:50 a.m. Free group piano lessons 7 p.m. Chess group meets 7:30 p.m.

Thursday: Aug. 2-8 is National Clown Week. Free clown class begins at 7 p.m. Coupon swapping from 7-9 p.m.

A tour to Old Salem, a restored Morovian town of the 18th century, is slated for Aug. 8. Advance sign up is required.

Hadrian VII

Hadrian VII, the study of the election of a Pope and his subsequent assassination will be presented by the Fort Bragg Playhouse tonight through Aug. 9. Starring Ed Dennehy as Pope Hadrian VII and featuring Pat Reese, Ted Davies, Minerva Davenport and Kathie Gaines, this is a provocative melodrama that ironically bursts with high humor.

Call the Playhouse Box Office at 396-7555 for reservations or further information.

Savings coupons

The Army Air Force Exchange Service has expanded its sales promotion program to reduce costs to exchange patrons.

Customer coupons found in the tabloids and flyers, available at the Main Exchange, will provide substantial discounts in service activities including the optical shop, dry cleaners and other AAFES outlets. Customers must present the coupons to the participating service activity for the discount.

Keesler Soul Choir

The Keesler Soul Choir from Keesler AFB, Miss., will present a concert of gospel music at the Pope Chapel Aug. 7 at 8 p.m.

This award-winning choir has produced seven albums and presented concerts throughout the United States.

Help will be needed to house the chorus on the evening of Aug. 7. There will be 40 adults in the choir.

If you can host anyone, call the Chapel office at Ext. 2676.

If it takes longer than 10 minutes to get these 12 services performed on your car...you need a change.

Introducing Dyeco Fastlube. More than a lube and oil change in just 10 minutes.

Whether you do it yourself or have someone else do it, changing your car's oil shouldn't have to be an all day ordeal.

And now, because there's Dyeco Fastlube, you don't have to be without your car. Not for a minute. At Dyeco, it takes our trained technicians only 10 MINUTES to give your car a whole lot more than just an oil change.

10 minutes. 12 services. Only $15.95

Compare Dyeco to ordinary oil change services. They may not even replace your worn out oil filter. That means one quart of grimy oil and sludge is left behind to contaminate what you thought was fresh oil. At Dyeco, you get a new Valvoline oil filter with *every* oil change. Not only that, but for what you would ordinarily pay for just an oil change, Dyeco does it all. All 12 services (see diagram) for only $15.95. That's a lot more for your money and a lot smarter way to keep your car running smooth, strong and clean.

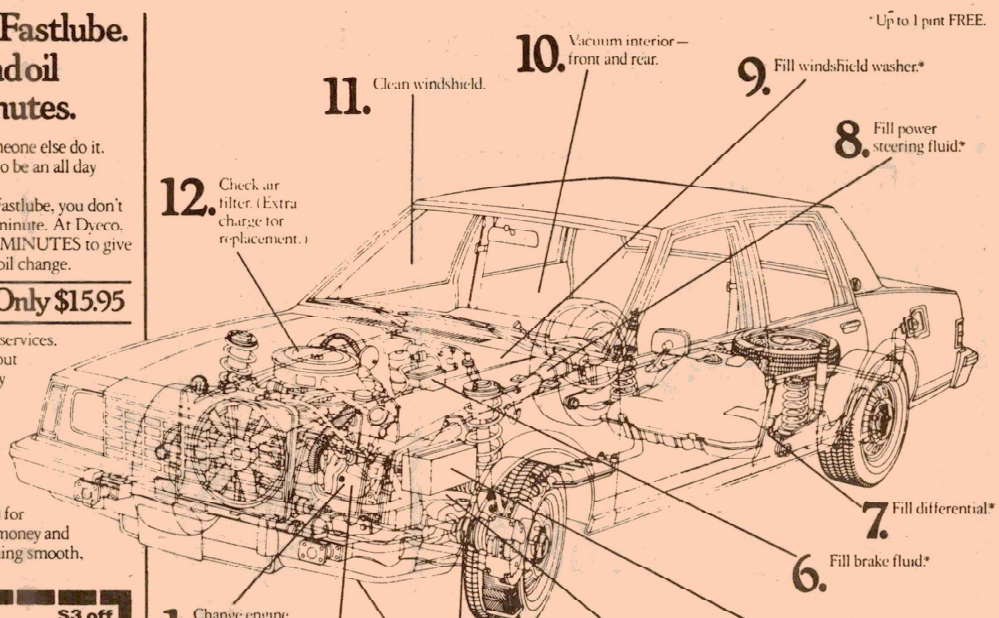

$3 off Regularly $15.95 — LIMIT ONE PER CUSTOMER — $3 off Regularly $15.95

DYECO FASTLUBE

2727 Raeford Rd.
(Across from Harris-Teeter & Sambo's)
323-4087
M-F: 8 a.m.-6 p.m., Sat.: 8 a.m.-5 p.m.
OFFER EXPIRES AUG. 31, 1981

$3 off Regularly $15.95 — NOT GOOD WITH ANY OTHER OFFERS. — $3 off Regularly $15.95

Valvoline Oil
The World's First—World's Finest

DYECO FASTLUBE