FHWA REGION	FEDERAL AID STATE	FEDERAL AID PROJECT	STATE ROUTE	STATE PROJECT	SHEET NO.
3	VA.	NHPP-064-3(488)	64	0064-131-811, B662	01
NBIS Number:		-	UPC No.	106692	
Federal Oversight Code:		FO	FHWA Construction and Scour Code:	X971-S5	

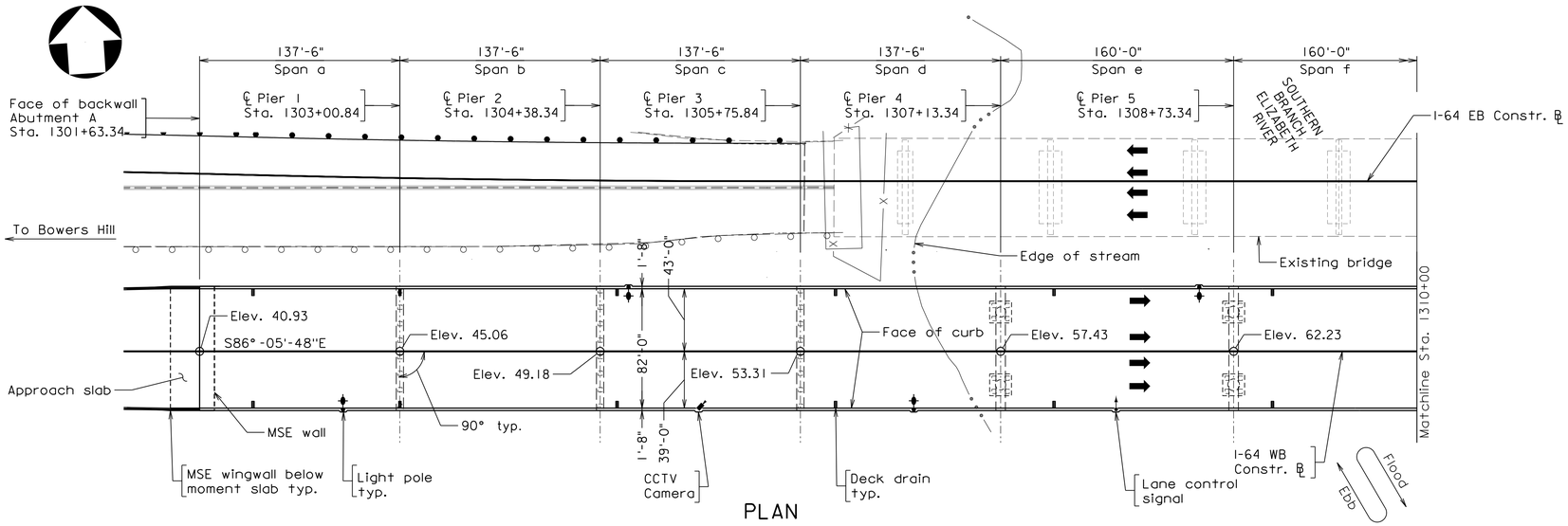

PLAN

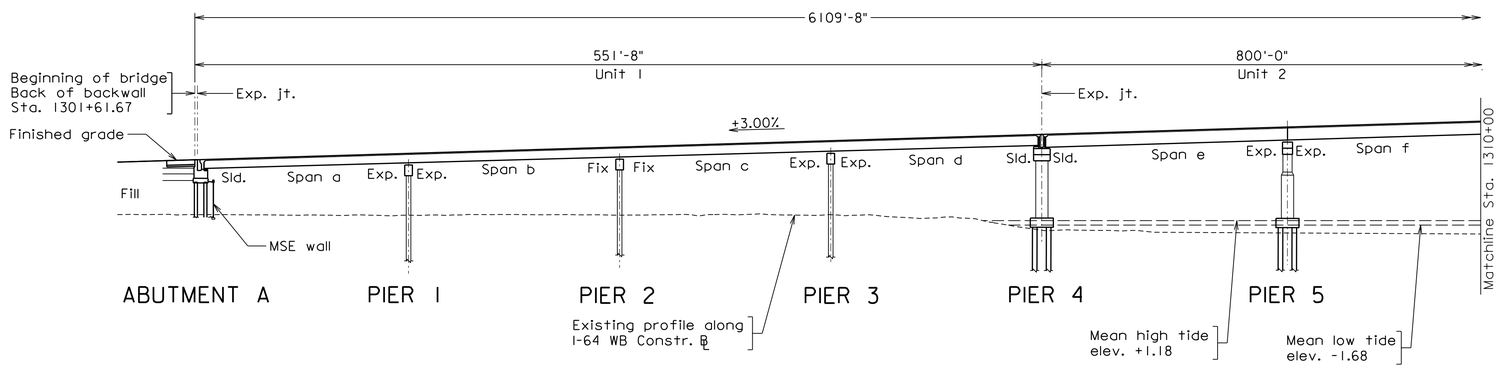

DEVELOPED SECTION ALONG I-64 WB CONSTR. ℄

DESIGN EXCEPTION(S):

None

GENERAL NOTES:

Width: 82'-0" face-to-face of curbs.

Span layout: Unit 1: 4-137'-6" prestressed concrete 77" deep bulb-T spans.
Unit 2: 5-160'-0" prestressed concrete 93" deep bulb-T spans.
Unit 3: 6-196'-0" prestressed concrete 95" deep bulb-T spans.
Unit 4: 192'-6"-250'-207'-6" continuous steel plate girder spans.
Unit 5: 3-160', 2-154'-5", 2-150' prestressed concrete 93" deep bulb-T spans.
Unit 6: 1-160', 2-155'-9", 3-150' prestressed concrete 93" deep bulb-T spans.
Unit 7: 1-150', 4-155', 1-150' prestressed concrete 93" deep bulb-T spans.
All bulb-T beams in units 1-3, 5-7 shal be continuous for, superimposed dead load and live load (including impact).

Capacity: HL-93 loading.

Drainage Area: Tidal

Specifications:
Construction: Virginia Department of Transportation Road and Bridge Specifications, 2016.

Design: AASHTO LRFD Bridge Design Specifications, 7th Edition, 2014; including 2015 and 2016 interims and VDOT Modifications.

Standards: Virginia Department of Transportation Road and Bridge Standards, 2016; including all current revisions.

Guide Specifications and Commentary for Vessel Collision Design Highway Bridges, 2nd Edition, 2009; 2010 Interim Specifications.

These plans are incomplete unless accompanied by the Supplemental Specifications and Special Provisions included in the contract documents.

Design loading includes 20 psf allowance for construction tolerances and construction methods.

Design loading includes 15 psf allowance for future wearing surface.

All structural steel, except bearings and sole plates, shall be ASTM A709 Grade 50W and shall be unpainted except as required by Section 407 of the Specifications. Structural steel in bearings and sole plates shall be ASTM A709 Grade 36 and shall be painted.

Concrete in prestressed piles shall be Class A5. Concrete in superstructure, parapets and backwalls of abutments shall be Low Shrinkage Class A4 Modified; in substructure, Class A3; in bag riprap in tidal water, Class A3.

Prestressed concrete in bulb-T shall be Class A5 having a minimum compressive cylinder strength at 28 days rangin from 8,000 psi to 10,000 psi and a minimum compressive cylinder strength at time of release of strands ranging from 6,500 to 8,000 psi.

All reinforcing steel shall be deformed and shall conform to ASTM A615, Grade 60 except for reinforcing steels noted as Corrosion Resistant Reinforcement (CRR) which shall conform to Section 223 of the Specifications. All reinforcing bar dimensions on the detailed drawings are to centers of bars except where otherwise noted and are subject to fabrication and construction tolerances.

CRR steels shall conform to one or more of the three Classes listed in Section 223 of the Specifications. The Class(es) of CRR steel(s) required on this project is/are noted on plan sheets and in the reinforcing steel schedule. CRR Steel, Class II or Class III, may be substituted for Class I. CRR Steel, Class III, may be substituted for Class II.

Prestressing strands shall be uncoated, seven-wire, low-relaxation steel strands conforming to ASTM A416 Grade 270 except in the precast concrete piling.

VDOT

COMMONWEALTH OF VIRGINIA
DEPARTMENT OF TRANSPORTATION

PROPOSED BRIDGE ON
I-64 (WBL) OVER SOUTHERN BRANCH ELIZABETH RIVER,
NPBL RR, AND RTE. 166 (BAINBRIDGE BLVD.)
CITY OF CHEASAPEAKE - 1.7 MI. W. OF ROUTE I-464
PROJ. 0064-131-811, B662

GENERAL NOTES: cont.

Prestressing strands in precast concrete piling (both square and cylindrical) shall be carbon fiber reinforced polymer in conformance with the special provisions for Carbon Fiber Reinforced Prestressed Concrete Piles. The cylinder piles shall be manufactured and installed in accordance with the Special Provision for Concrete Cylinder Piles.

All piles shall be driven to the required nominal axial resistance. All piles shall be driven to or below the minimum tip elevation unless otherwise directed or authorized by the Engineer. Nominal axial resistance shall be determined by Dynamic Pile Testing.

NOTES:

1. For approach slab details, see VDOT Standard Plan No. BAS-11.
2. For deck drain details, see VDOT Manual of the Structure and Bridge Division Part 2, file Nos. 22.03-14 and 22.03-27.

LEGEND:

Sld.	Sliding bearing
Fix	Fixed bearing
Exp.	Expansion bearing

PRELIMINARY PLANS
THESE PLANS NOT TO BE USED FOR CONSTRUCTION OF BRIDGE

Scale: 1" = 50'

No.	Description	Date

REVISIONS

For Table of Revisions see sheet 2.

PARSONS TRANSPORTATION GROUP INC. OF VIRGINIA
FAIRFAX, VIRGINIA
BRIDGE ENGINEER

PLANS BY:	Consultant
COORDINATED:	
SUPERVISED:	
DESIGNED:	Ali M. Ghalib
DRAWN:	Michael T. Wieczorek
CHECKED:	Gregory H. Shafer

Recommended for Approval: _____ Design - Build Project Manager, Granite/Parsons/Corman Joint Venture — Date

Approved: _____ Chief Engineer — Date

Date: November 2017

© 2017, Commonwealth of Virginia

b106692_001-HR.dgn
2:37:37 PM
12/19/2017

FHWA REGION	FEDERAL AID STATE	FEDERAL AID PROJECT	STATE ROUTE	STATE PROJECT	SHEET NO.
3	VA.	NHPP-064-3(488)	64	0064-131-811, B662	02

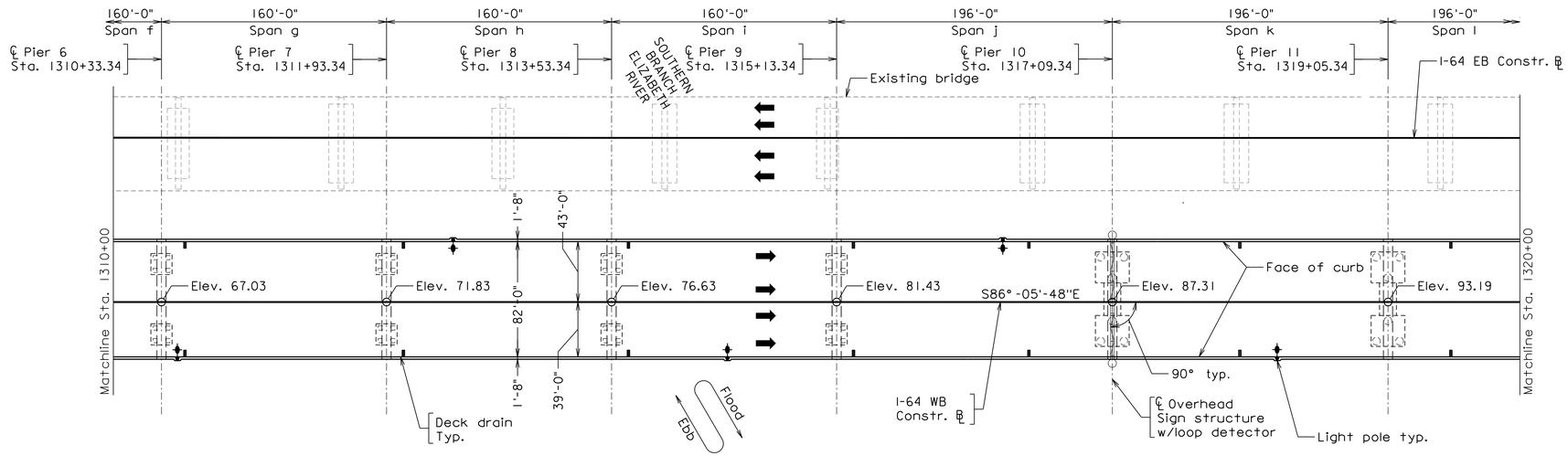

PLAN

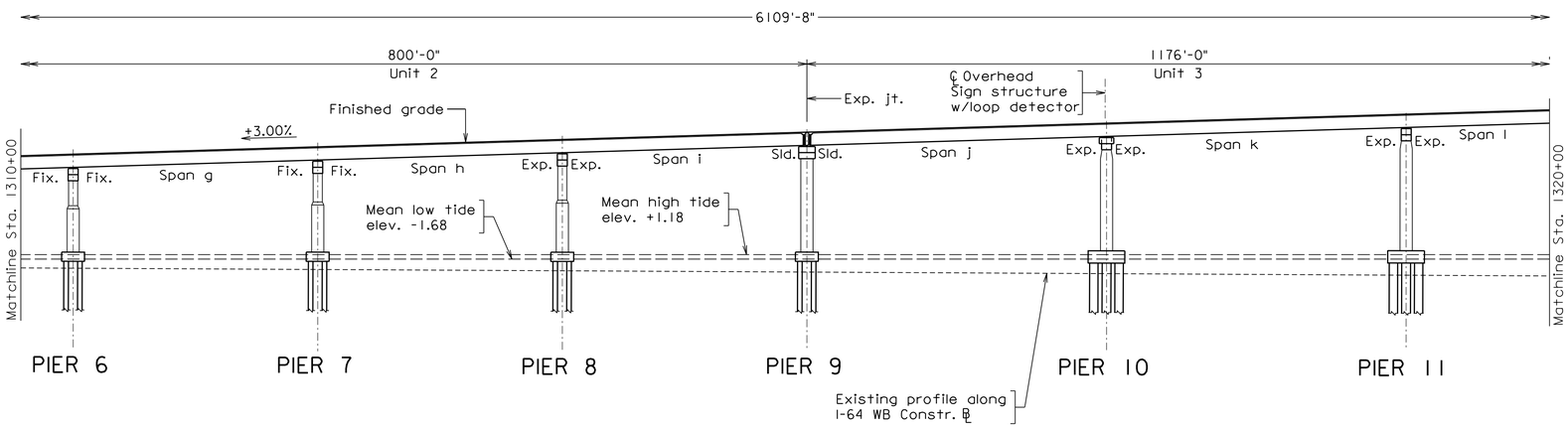

DEVELOPED SECTION ALONG I-64 WB CONSTR. ℄

PRELIMINARY PLANS

THESE PLANS NOT TO BE USED FOR CONSTRUCTION OF BRIDGE

PARSONS TRANSPORTATION GROUP INC. OF VIRGINIA
FAIRFAX, VIRGINIA
BRIDGE ENGINEER

Scale: 1" = 50'

© 2017, Commonwealth of Virginia

No.	Description	Date
	Revisions	

COMMONWEALTH OF VIRGINIA
DEPARTMENT OF TRANSPORTATION

STRUCTURE AND BRIDGE DIVISION

GENERAL PLAN AND ELEVATION-2

Designed: AMG	Date	Plan No.	Sheet No.
Drawn: MTW	Nov 2017		02 of 15
Checked: GHS			

b106692_002-HR.dgn 1:28:08 PM 12/18/2017

FHWA REGION	FEDERAL AID STATE	FEDERAL AID PROJECT	STATE ROUTE	STATE PROJECT	SHEET NO.
3	VA.	NHPP-064-3(488)	64	0064-131-811, B662	03

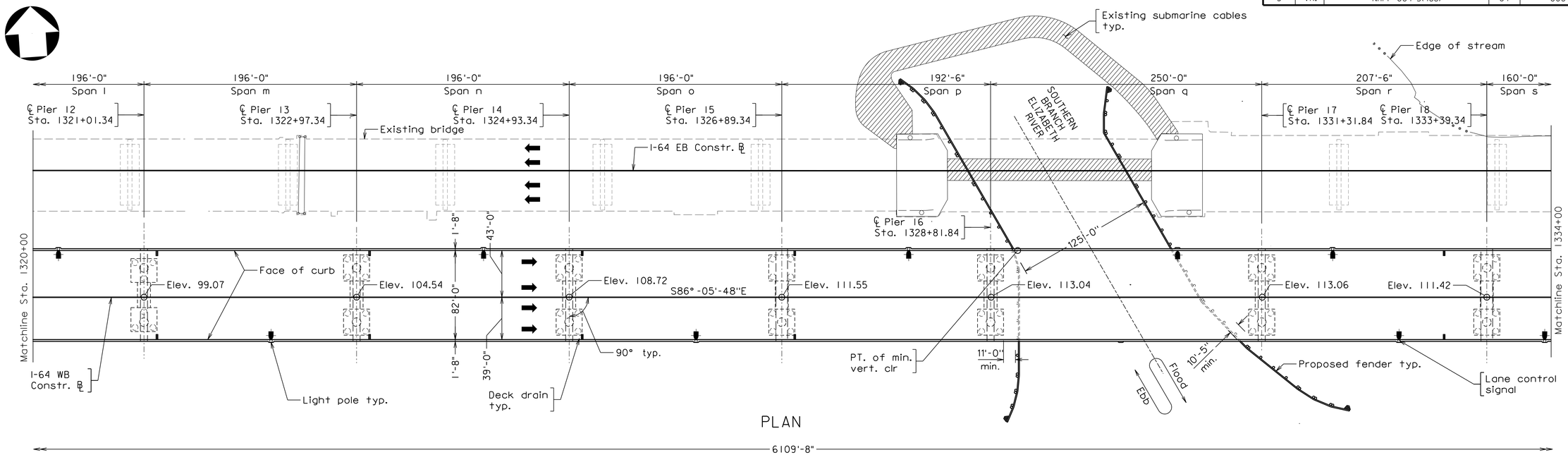

PRELIMINARY PLANS

THESE PLANS NOT TO BE USED FOR CONSTRUCTION OF BRIDGE

PARSONS TRANSPORTATION GROUP INC. OF VIRGINIA
FAIRFAX, VIRGINIA
BRIDGE ENGINEER

Scale: 1" = 50'

© 2018, Commonwealth of Virginia

No.	Description	Date

Revisions

COMMONWEALTH OF VIRGINIA
DEPARTMENT OF TRANSPORTATION

STRUCTURE AND BRIDGE DIVISION

GENERAL PLAN AND ELEVATION-3

Designed: AMG
Drawn: MTW
Checked: GHS

Date	Plan No.	Sheet No.
Nov 2017		03 of 15

b106692_003-HR.dgn 7:52:40 AM 1/10/2018

FHWA REGION	FEDERAL AID STATE	FEDERAL AID PROJECT	STATE ROUTE	STATE PROJECT	SHEET NO.
3	VA.	NHPP-064-3(488)	64	0064-131-811, B662	04

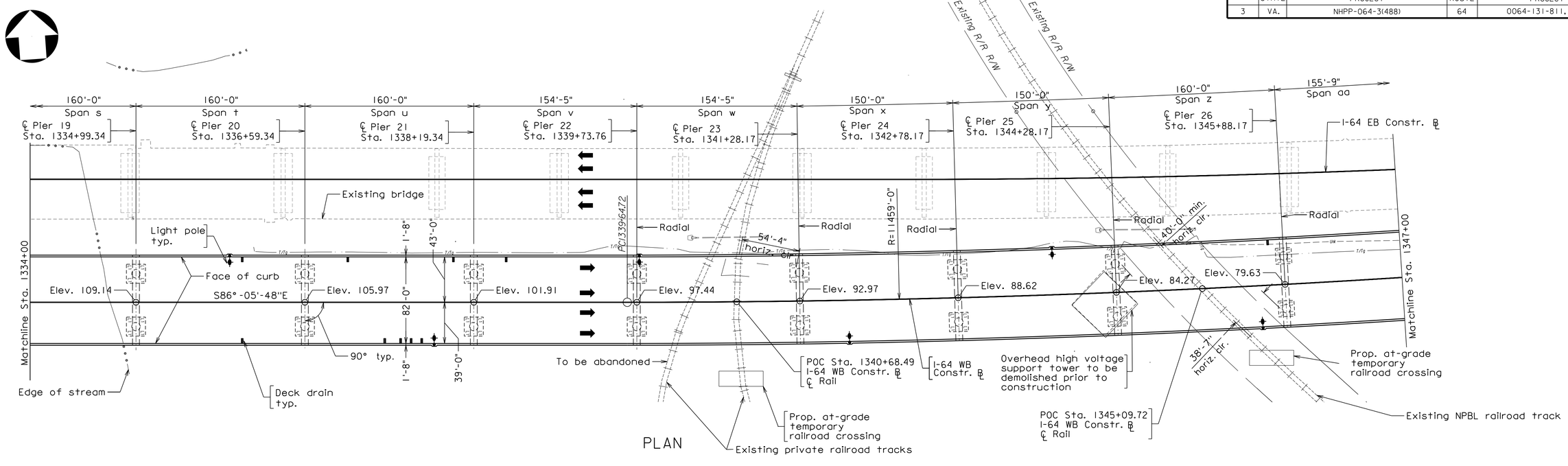

PLAN

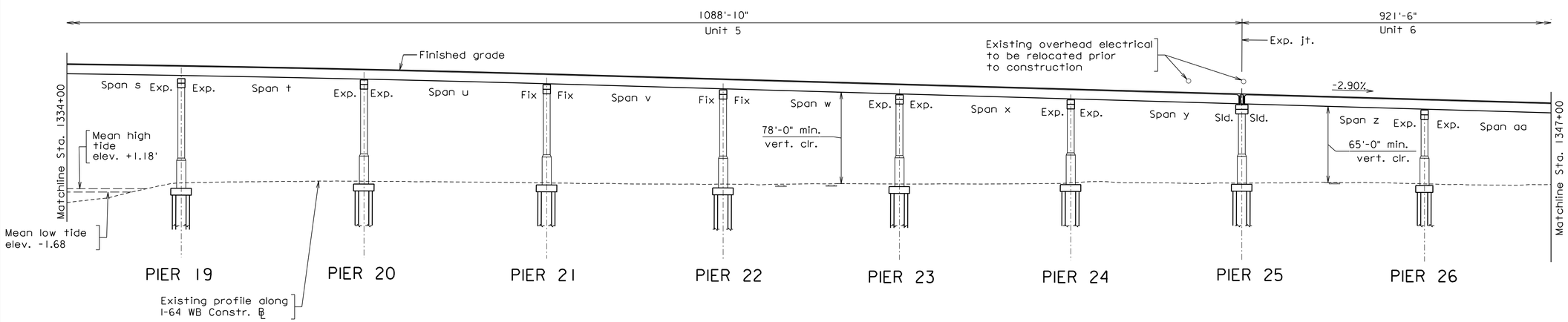

DEVELOPED SECTION ALONG I-64 WB CONSTR. ℄

PRELIMINARY PLANS
THESE PLANS NOT TO BE USED FOR CONSTRUCTION OF BRIDGE

PARSONS TRANSPORTATION GROUP INC. OF VIRGINIA
FAIRFAX, VIRGINIA
BRIDGE ENGINEER

No.	Description	Date
	Revisions	

COMMONWEALTH OF VIRGINIA
DEPARTMENT OF TRANSPORTATION

STRUCTURE AND BRIDGE DIVISION

GENERAL PLAN AND ELEVATION-4

Designed: AMG
Drawn: MTW
Checked: CHS

Date	Plan No.	Sheet No.
Nov 2017		04 of 15

Scale: 1" = 50'

© 2017, Commonwealth of Virginia

12/19/2017 2:42:54 PM b106692_004-HR.dgn

FHWA REGION	FEDERAL AID STATE	FEDERAL AID PROJECT	STATE ROUTE	STATE PROJECT	SHEET NO.
3	VA.	NHPP-064-3(488)	64	0064-131-811, B662	05

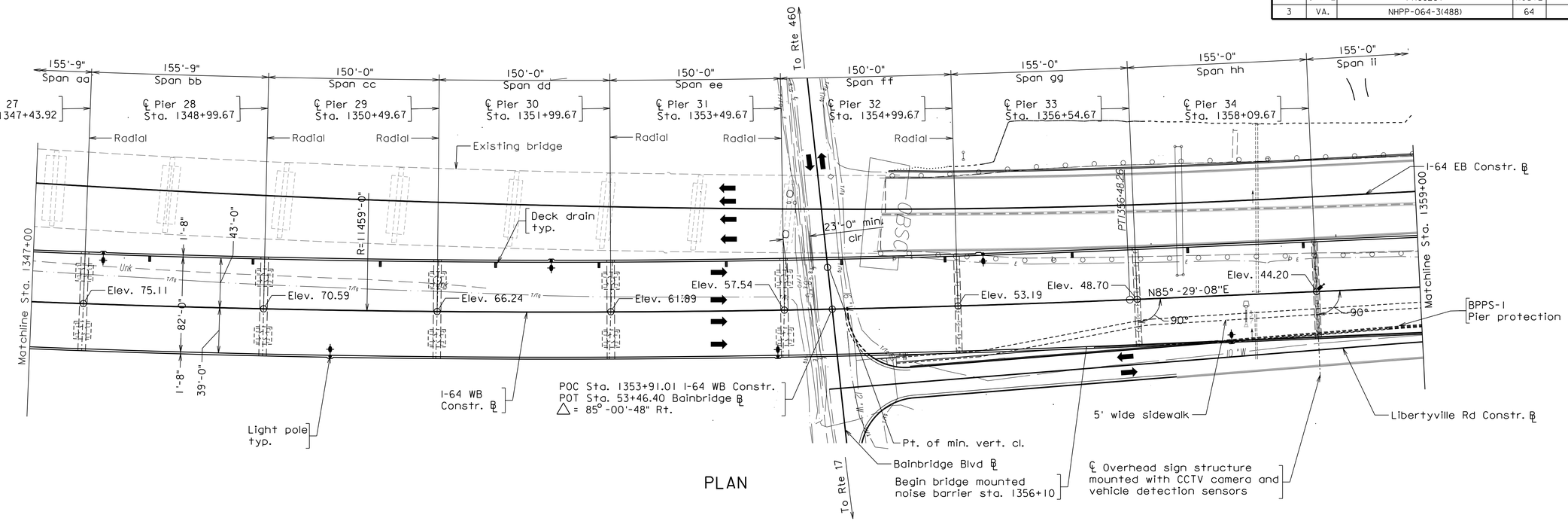

PLAN

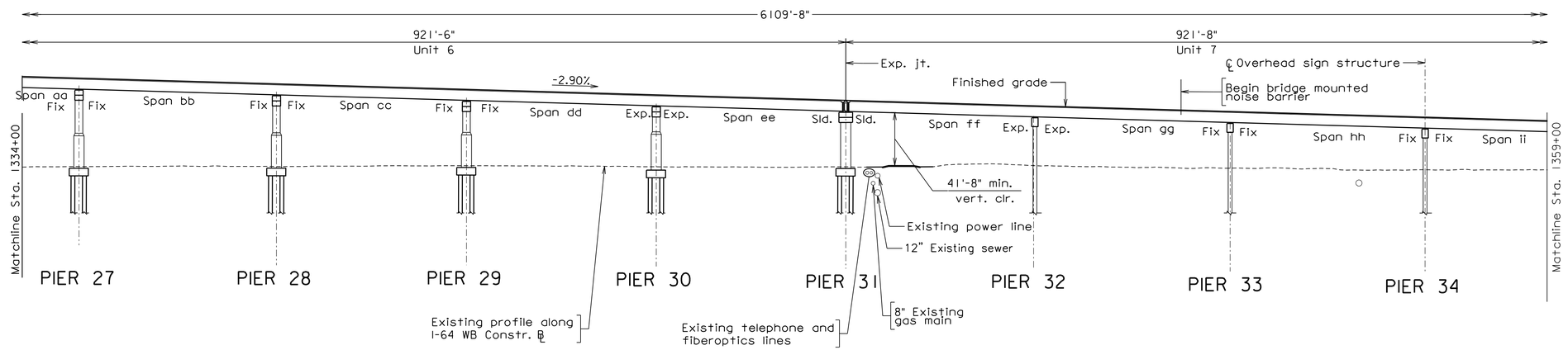

DEVELOPED SECTION ALONG I-64 WB CONSTR. ℄

PRELIMINARY PLANS

THESE PLANS NOT TO BE USED FOR CONSTRUCTION OF BRIDGE

PARSONS TRANSPORTATION GROUP INC. OF VIRGINIA
FAIRFAX, VIRGINIA
BRIDGE ENGINEER

Scale: 1" = 50'

© 2017, Commonwealth of Virginia

No.	Description	Date

Revisions

COMMONWEALTH OF VIRGINIA
DEPARTMENT OF TRANSPORTATION

STRUCTURE AND BRIDGE DIVISION

GENERAL PLAN AND ELEVATION-5

Designed: AMG	Date	Plan No.	Sheet No.
Drawn: MTW	Nov 2017		05 of 15
Checked: GHS			

b106692_005-HR.dgn 1:29:46 PM 12/18/2017

FHWA REGION	FEDERAL AID STATE	FEDERAL AID PROJECT	STATE ROUTE	STATE PROJECT	SHEET NO.
3	VA.	NHPP-064-3(488)	64	0064-131-811, B662	06

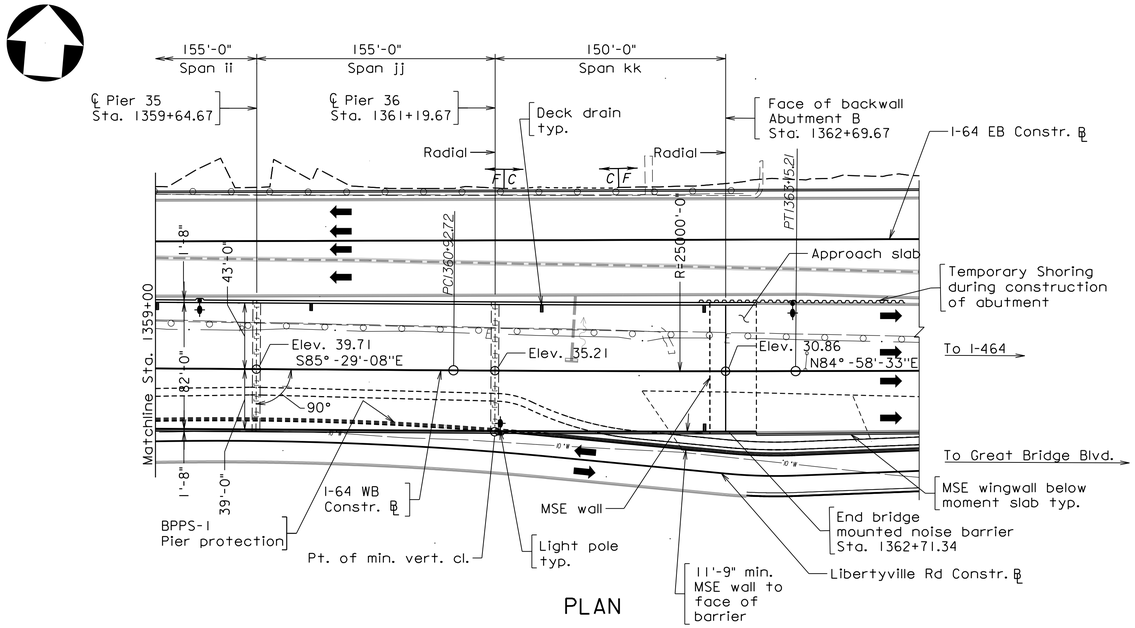

PLAN

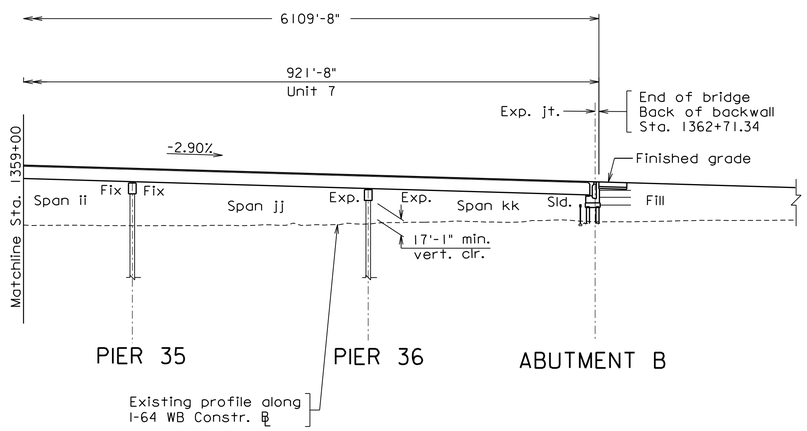

DEVELOPED SECTION ALONG I-64 WB CONSTR. ℄

PRELIMINARY PLANS

THESE PLANS NOT TO BE USED FOR CONSTRUCTION OF BRIDGE

PARSONS TRANSPORTATION GROUP INC. OF VIRGINIA
FAIRFAX, VIRGINIA
BRIDGE ENGINEER

Scale: 1" = 50'

© 2017, Commonwealth of Virginia

No.	Description	Date

Revisions

COMMONWEALTH OF VIRGINIA
DEPARTMENT OF TRANSPORTATION

STRUCTURE AND BRIDGE DIVISION

GENERAL PLAN AND ELEVATION-6

Designed: AMC	Date	Plan No.	Sheet No.
Drawn: MTW	Nov 2017		06 of 15
Checked: CHS			

b106692_006-HR.dgn 8:41:04 AM 12/19/2017

FHWA REGION	FEDERAL AID STATE	FEDERAL AID PROJECT	STATE ROUTE	STATE PROJECT	SHEET NO.
3	VA.	NHPP-064-3(488)	64	0064-131-811, B662	07

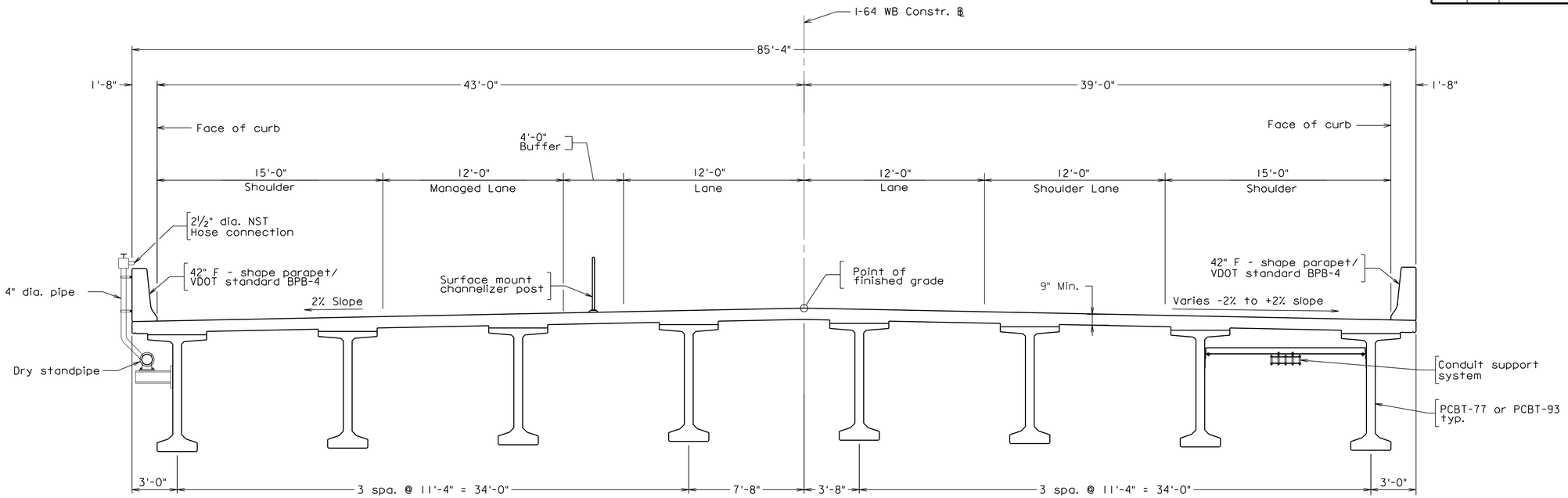

TRANSVERSE SECTION

Sta. 1301+63.34 to Sta. 1315+13.34
Sta. 1333+39.34 to Sta. 1339+16.39

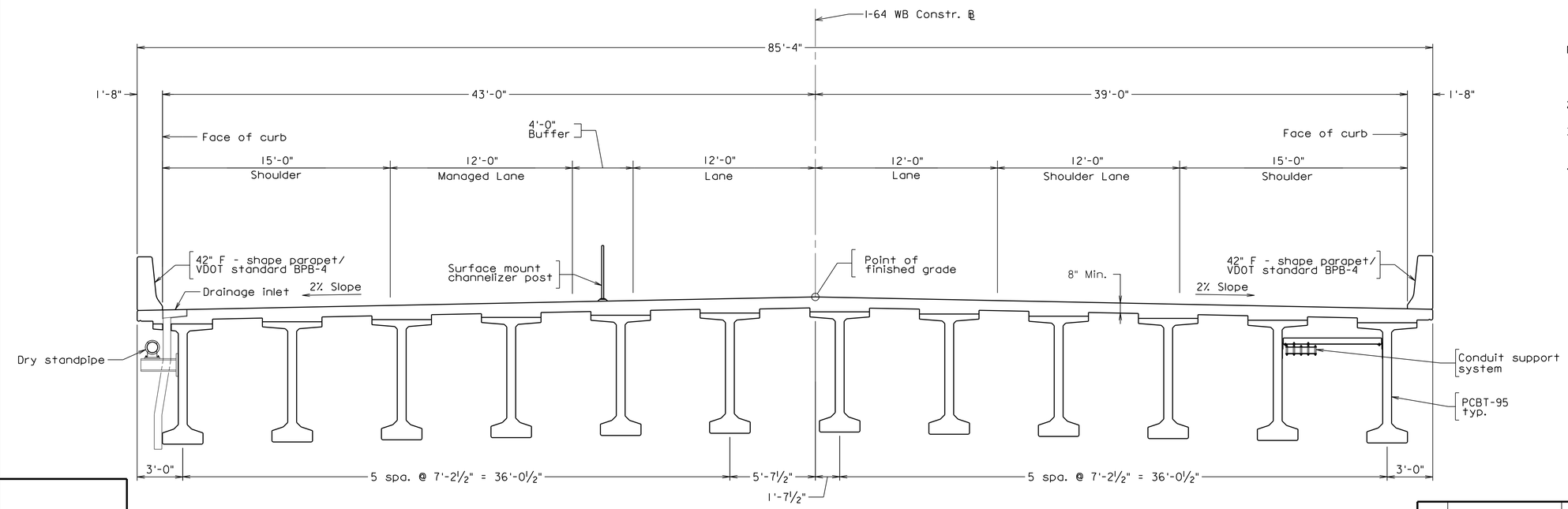

TRANSVERSE SECTION

Sta. 1315+13.34 to Sta. 1326+89.34

Notes:

1. For location of deck drains, sign structures and lights on bridge, see General Plan and Elevation drawings.
2. For limits of sound barrier on bridge, see General Plan and Elevation drawings.
3. Dry standpipe hose valves located along outside of north traffic barrier at approximately 200 ft. along bridge length.
4. Deck reinforcement shall be class III CRR steel as defined by VDOT II M-S&B-81.

PRELIMINARY PLANS
THESE PLANS NOT TO BE USED FOR CONSTRUCTION OF BRIDGE

PARSONS TRANSPORTATION GROUP INC. OF VIRGINIA
FAIRFAX, VIRGINIA
BRIDGE ENGINEER

Scale: ¼" = 1'-0"

© 2017, Commonwealth of Virginia

No.	Description	Date
	Revisions	

COMMONWEALTH OF VIRGINIA
DEPARTMENT OF TRANSPORTATION

STRUCTURE AND BRIDGE DIVISION

TRANSVERSE SECTION - 1

Designed: AMG	Date	Plan No.	Sheet No.
Drawn: MTW	Nov 2017		07 of 15
Checked: AO			

FHWA REGION	FEDERAL AID STATE	FEDERAL AID PROJECT	STATE ROUTE	STATE PROJECT	SHEET NO.
3	VA.	NHPP-064-3(488)	64	0064-131-811, B662	08

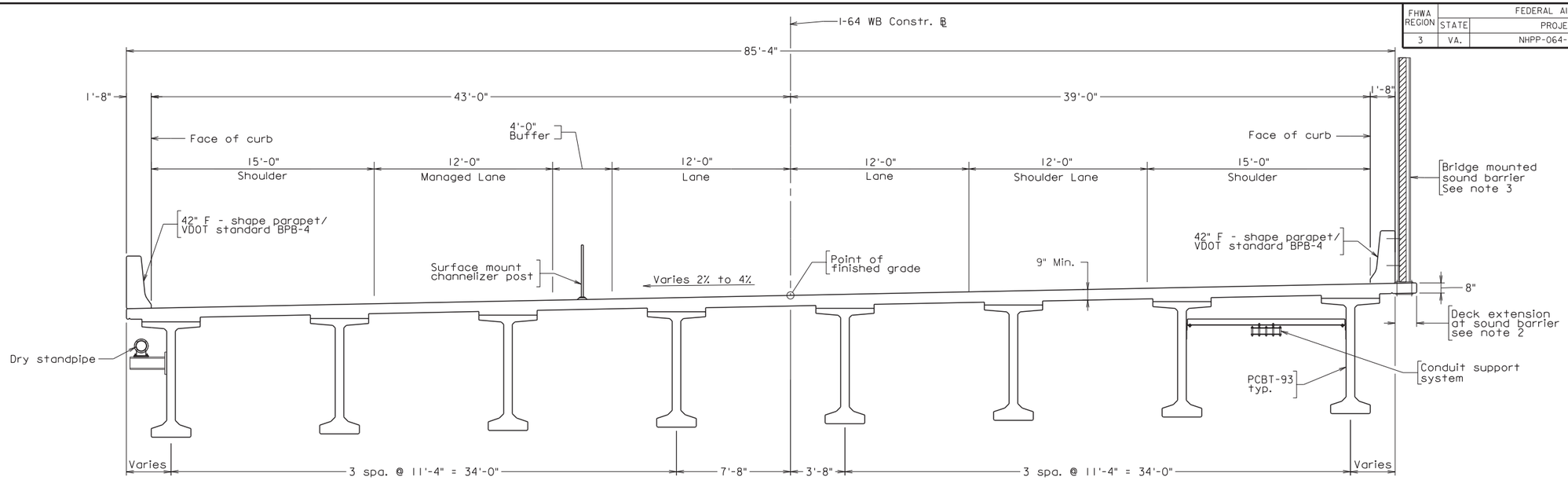

TRANSVERSE SECTION

Sta. 1339+16.39 to Sta. 1362+69.67

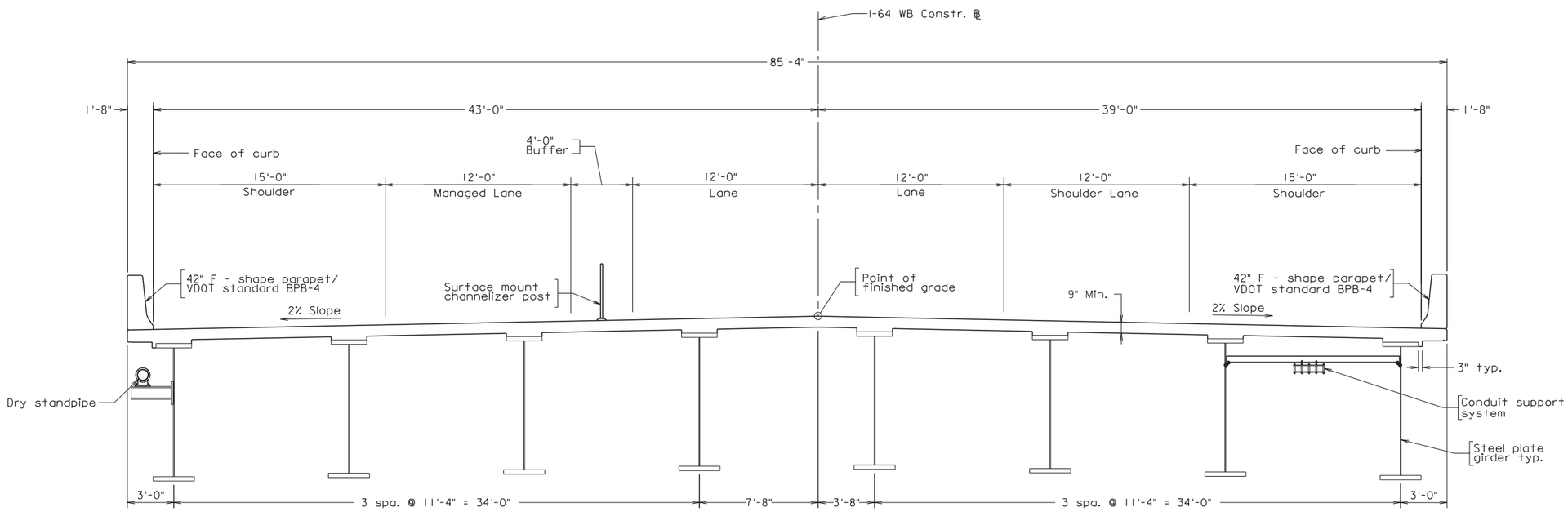

Notes:

1. For notes see Transverse Section - 1 drawing.
2. Deck extension shall be full length of sound barrier.
3. Limits of bridge mounted sound barrier from Sta. 1356+10 to Sta. 1362+71.34.

PRELIMINARY PLANS

THESE PLANS NOT TO BE USED FOR CONSTRUCTION OF BRIDGE

TRANSVERSE SECTION

Sta. 1326+89.34 to Sta. 1333+39.34

Scale: 1/4" = 1'-0"

© 2017, Commonwealth of Virginia

No.	Description	Date

Revisions

COMMONWEALTH OF VIRGINIA
DEPARTMENT OF TRANSPORTATION

STRUCTURE AND BRIDGE DIVISION

TRANSVERSE SECTION - 2

Designed: AMC
Drawn: MTW
Checked: AD

Date	Plan No.	Sheet No.
Nov 2017		08 of 15

PARSONS TRANSPORTATION GROUP INC. OF VIRGINIA
FAIRFAX, VIRGINIA
BRIDGE ENGINEER

b106692_018-HR.dgn 4:20:26 PM 11/13/2017

FHWA REGION	FEDERAL AID STATE	FEDERAL AID PROJECT	STATE ROUTE	STATE PROJECT	SHEET NO.
3	VA.	NHPP-064-3(488)	64	0064-131-811, B662	08A

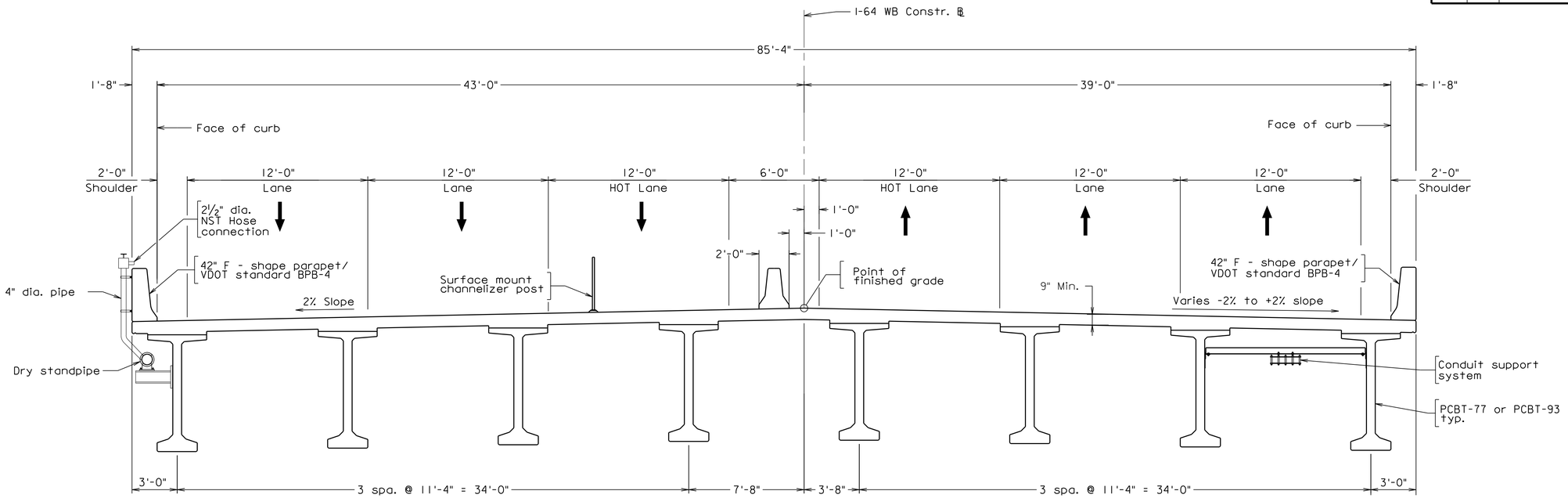

TRANSVERSE SECTION

Future phase 2 during construction
(by others)

PRELIMINARY PLANS

THESE PLANS NOT TO BE USED FOR CONSTRUCTION OF BRIDGE

PARSONS TRANSPORTATION GROUP INC. OF VIRGINIA
FAIRFAX, VIRGINIA
BRIDGE ENGINEER

Scale: 1/4" = 1'-0"

© 2017, Commonwealth of Virginia

No.	Description	Date

Revisions

COMMONWEALTH OF VIRGINIA
DEPARTMENT OF TRANSPORTATION

STRUCTURE AND BRIDGE DIVISION

TRANSVERSE SECTION - 3
FUTURE PHASE 2 CONSTRUCTION

Designed: AMG
Drawn: MTW
Checked: AQ

Date: Nov 2017

Plan No.

Sheet No. 08A of 15

FHWA REGION	FEDERAL AID STATE	FEDERAL AID PROJECT	STATE ROUTE	STATE PROJECT	SHEET NO.
3	VA.	NHPP-064-3(488)	64	0064-131-811, B662	11

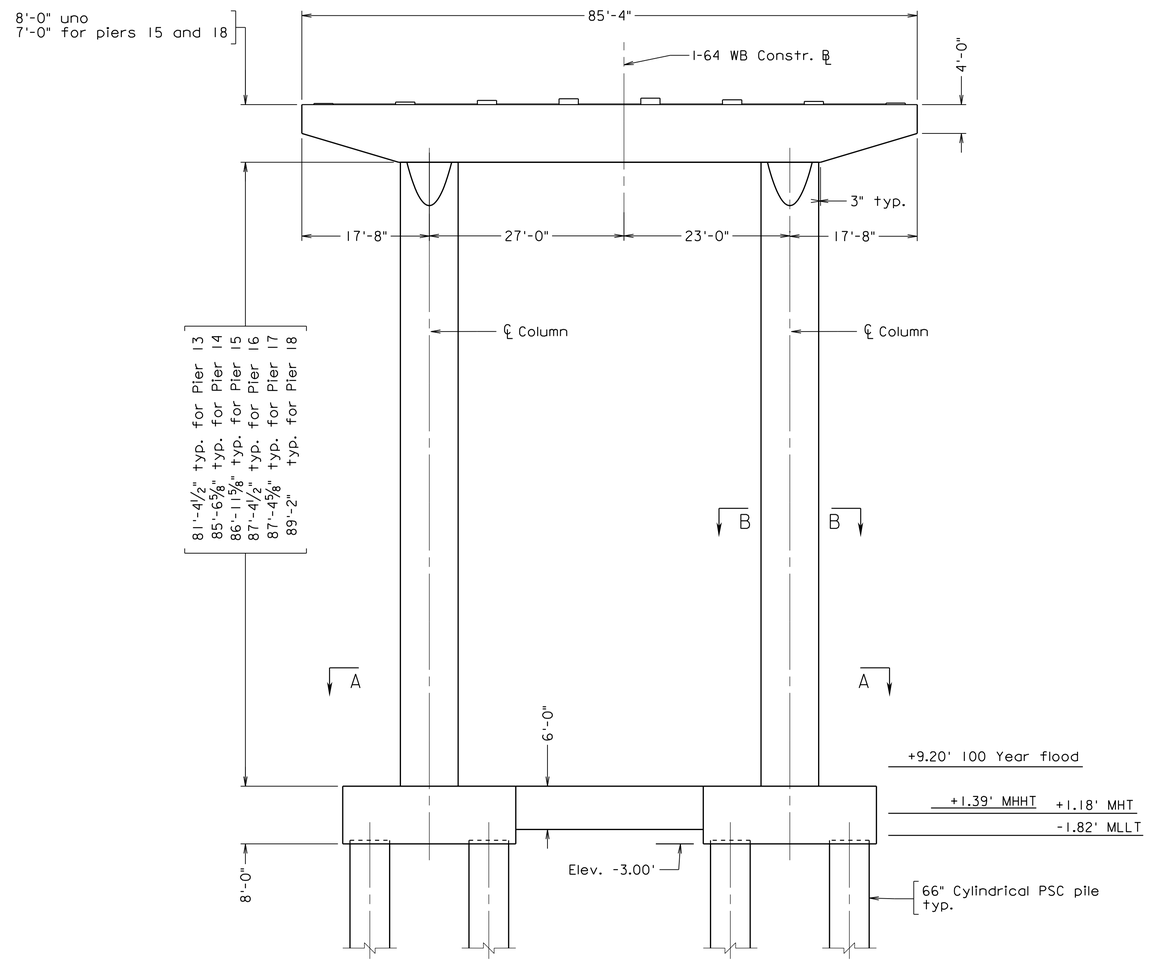

ELEVATION

Virginia Pier Cap drain trough not shown.

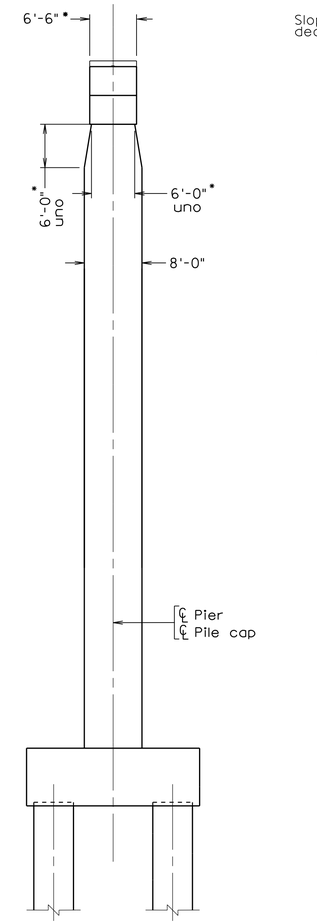

* Typical pier shown.
Pier cap details for pier 15 and 18
see Virginia Pier Cap section

END VIEW

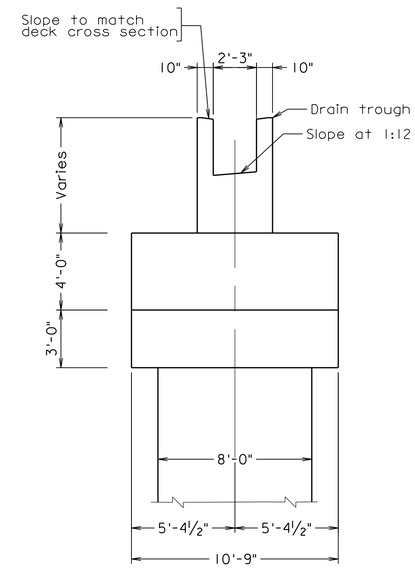

VIRGINIA PIER CAP SECTION

Piers 15 and 18

Scale: ¼" = 1'-0"

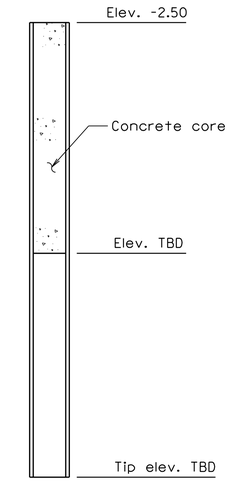

66" CYLINDRICAL PSC PILE DETAIL

Scale: 3/16" = 1'-0"

Note: concrete core rebar not shown

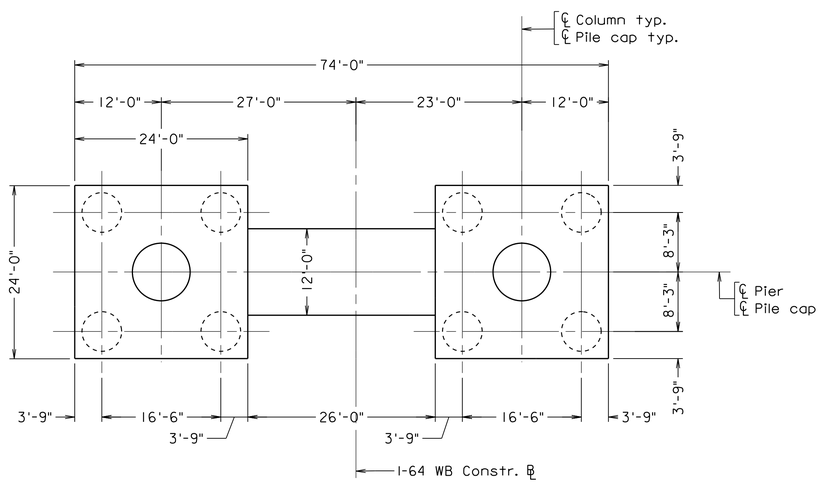

SECTION A-A

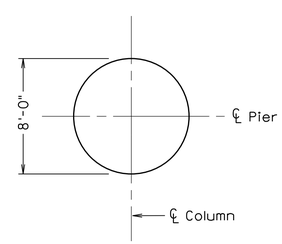

SECTION B-B

Scale: 3/16" = 1'-0"

Note:

This sheet applies to Piers 13 to 18.

PRELIMINARY PLANS

THESE PLANS NOT TO BE USED FOR CONSTRUCTION OF BRIDGE

Scale: 3/32" = 1'-0" unless otherwise noted

© 2017, Commonwealth of Virginia

No.	Description	Date
	Revisions	

COMMONWEALTH OF VIRGINIA
DEPARTMENT OF TRANSPORTATION

STRUCTURE AND BRIDGE DIVISION

PIER DETAILS
TYPE I

Designed: AMG	Date	Plan No.	Sheet No.
Drawn: EMG	Nov 2017		11 of 15
Checked: TAK			

PARSONS TRANSPORTATION GROUP INC. OF VIRGINIA
FAIRFAX, VIRGINIA
BRIDGE ENGINEER

12/22/2017 10:02:08 AM b106692_010-HR.dgn

FHWA REGION	FEDERAL AID STATE	FEDERAL AID PROJECT	STATE ROUTE	STATE PROJECT	SHEET NO.
3	VA.	NHPP-064-3(488)	64	0064-131-811, B662	12

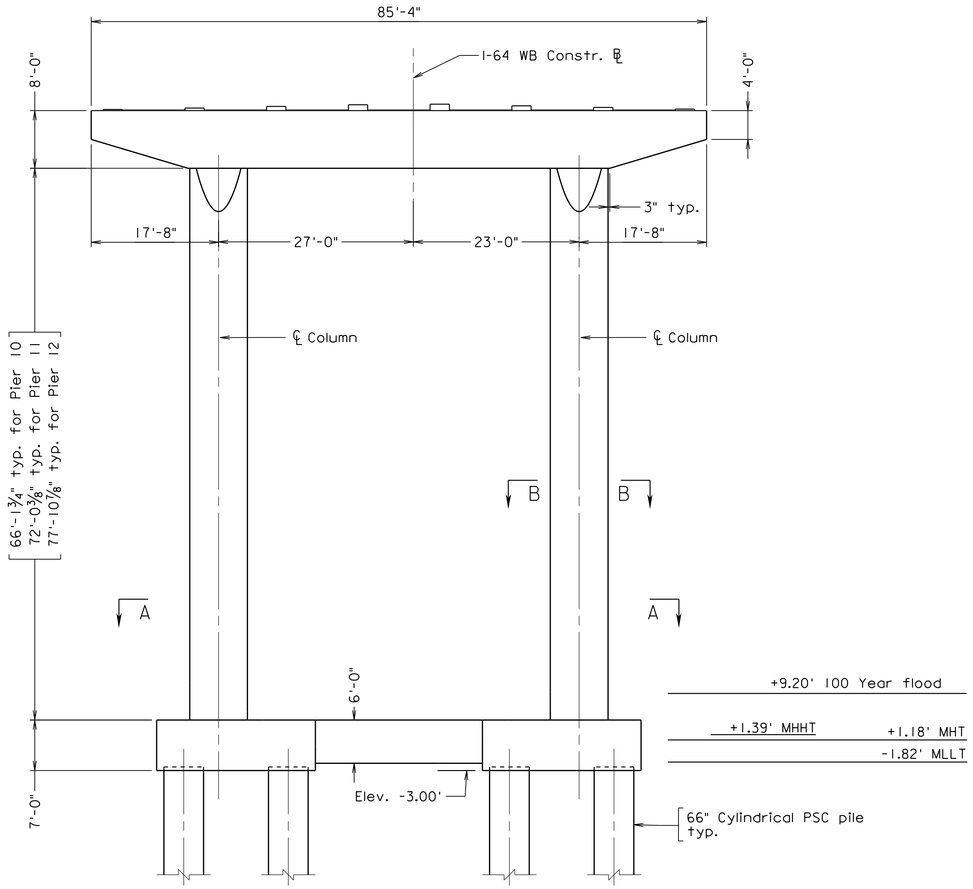

ELEVATION

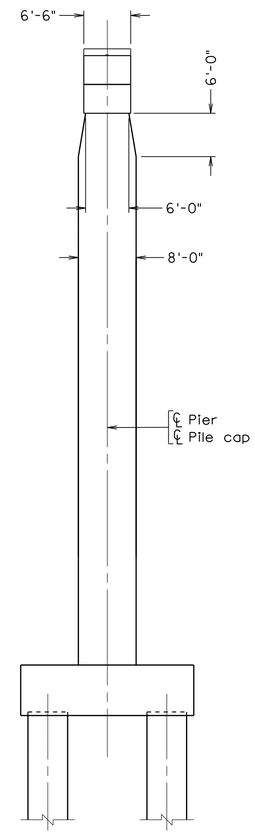

END VIEW

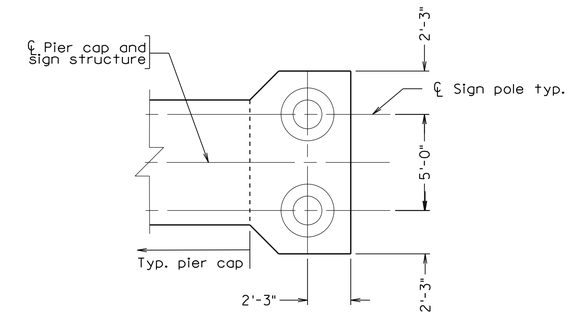

PLAN

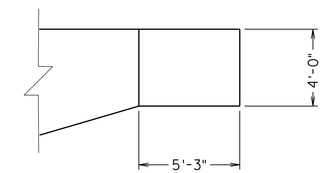

ELEVATION

CAP DETAIL AT PIER 10

Scale: ¼" = 1'-0"

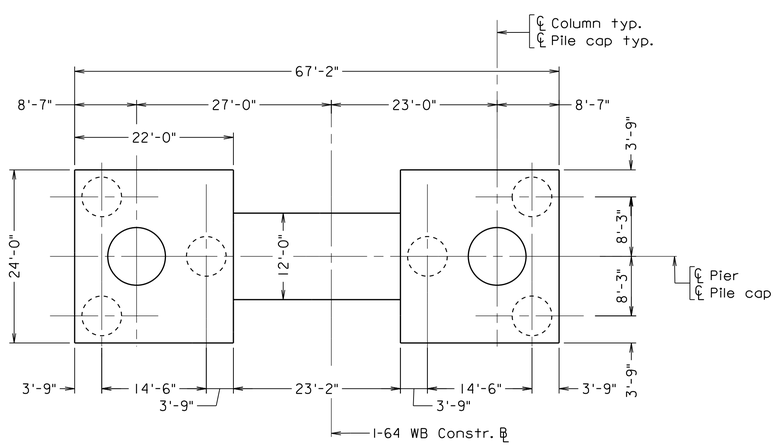

SECTION A-A

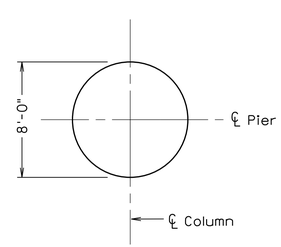

SECTION B-B

Scale: 3/16" = 1'-0"

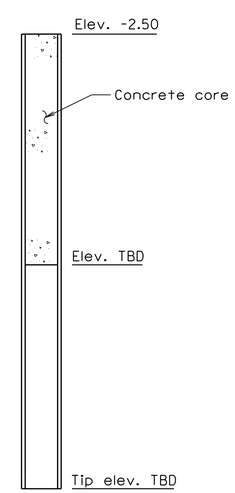

66" CYLINDRICAL PSC PILE DETAIL

Note: concrete core rebar not shown

Note:

This sheet applies to Piers 10 to 12.

PRELIMINARY PLANS

THESE PLANS NOT TO BE USED FOR CONSTRUCTION OF BRIDGE

Scale: 3/32" = 1'-0" unless otherwise noted

© 2017, Commonwealth of Virginia

No.	Description	Date
	Revisions	

COMMONWEALTH OF VIRGINIA
DEPARTMENT OF TRANSPORTATION

STRUCTURE AND BRIDGE DIVISION

PIER DETAILS - TYPE II

Designed: AMG
Drawn: EMG
Checked: TAK

Date: Nov 2017

Plan No.:

Sheet No.: 12 of 15

PARSONS TRANSPORTATION GROUP INC. OF VIRGINIA
FAIRFAX, VIRGINIA
BRIDGE ENGINEER

12/18/2017 12:30:13 PM b106692_011-HR.dgn

FHWA REGION	FEDERAL AID STATE	FEDERAL AID PROJECT	STATE ROUTE	STATE PROJECT	SHEET NO.
3	VA.	NHPP-064-3(488)	64	0064-131-811, B662	13

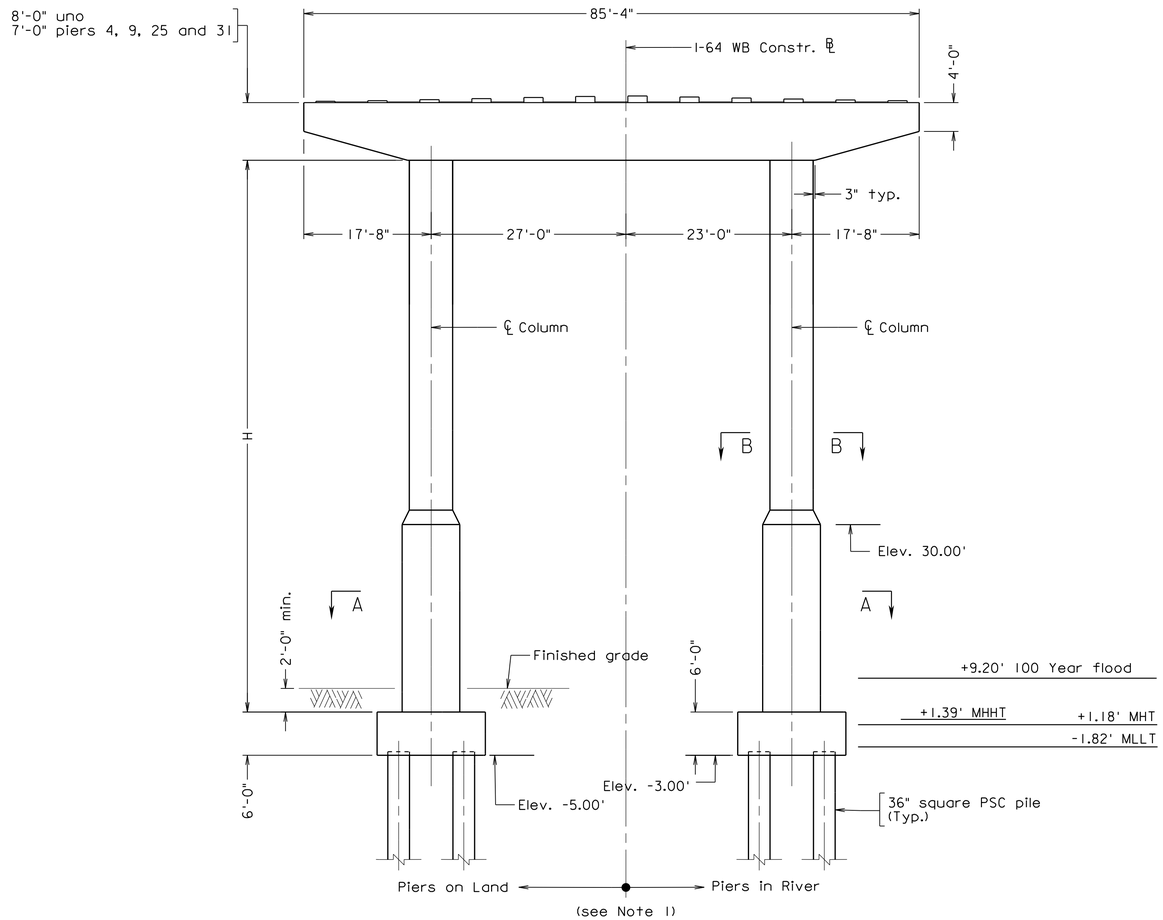

ELEVATION

Virginia Pier Cap drain trough not shown

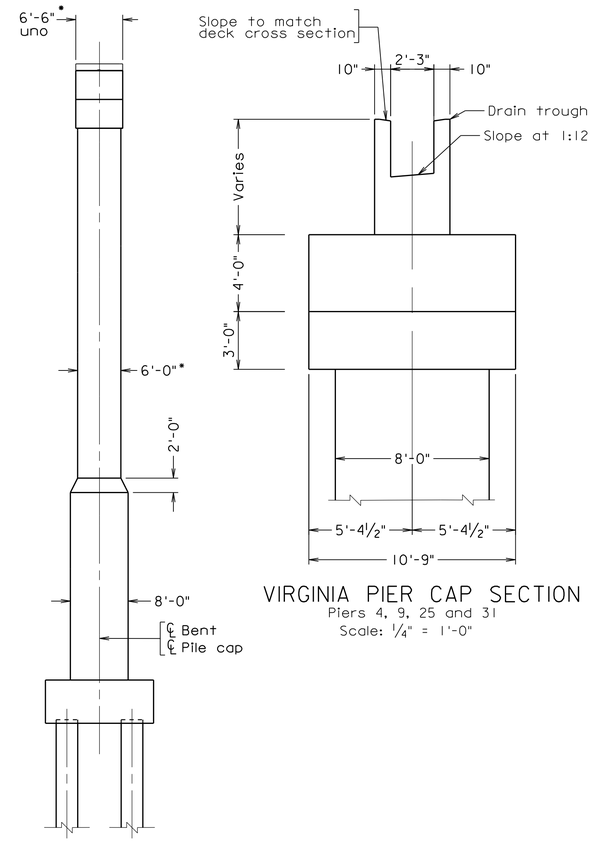

*Typical pier cap shown. Pier cap details for Piers 4, 9, 25 and 31 see Virginia Pier Cap section

END VIEW

VIRGINIA PIER CAP SECTION

Piers 4, 9, 25 and 31

Scale: ¼" = 1'-0"

PIER COLUMN HEIGHT	
Location	H
Pier 4	39'-4¼"
Pier 5	43'-1¾"
Pier 6	47'-11⅜"
Pier 7	52'-9"
Pier 8	57'-6⅝"
Pier 9	63'-2⅛"
Pier 19	92'-0¾"
Pier 20	88'-10⅝"
Pier 21	84'-10"
Pier 22	80'-0⅜"
Pier 23	75'-0⅝"
Pier 24	70'-8⅜"
Pier 25	67'-4¼"
Pier 26	61'-8½"
Pier 27	57'-2¼"
Pier 28	52'-8⅛"
Pier 29	48'-4"
Pier 30	43'-11¾"
Pier 31	40'-7½"

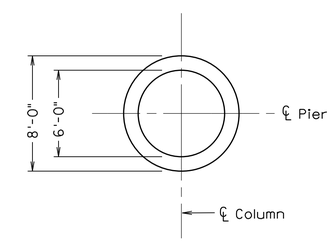

SECTION B-B

Scale: 3/16" = 1'-0"

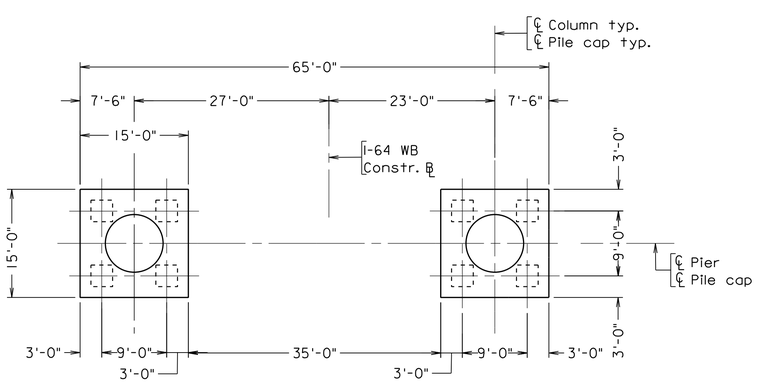

SECTION A-A

For piers 4 thru 9 and piers 26 thru 31

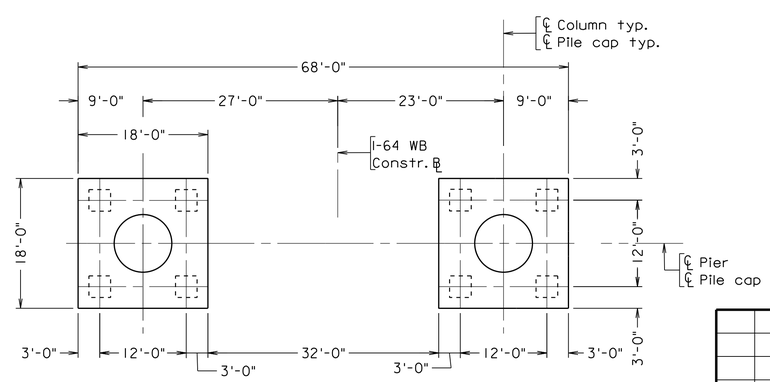

SECTION A-A

For piers 19 thru 25

Notes:

1. This sheet applies to River Piers 4 to 9 and Land Piers 19 to 31.

PRELIMINARY PLANS

THESE PLANS NOT TO BE USED FOR CONSTRUCTION OF BRIDGE

No.	Description	Date
	Revisions	

COMMONWEALTH OF VIRGINIA
DEPARTMENT OF TRANSPORTATION

STRUCTURE AND BRIDGE DIVISION

PIER DETAILS - TYPE III

Designed: AMC
Drawn: MTW
Checked: TAK

Date: Nov 2017

Plan No.

Sheet No. 13 of 15

PARSONS TRANSPORTATION GROUP INC. OF VIRGINIA
FAIRFAX, VIRGINIA
BRIDGE ENGINEER

Scale: 3/32" = 1'-0" unless otherwise noted

© 2017, Commonwealth of Virginia

b106692_012-HR.dgn 3:27:35 PM 12/19/2017

FHWA REGION	FEDERAL AID STATE	FEDERAL AID PROJECT	STATE ROUTE	STATE PROJECT	SHEET NO.
3	VA.	NHPP-064-3(488)	64	0064-131-811, B662	09

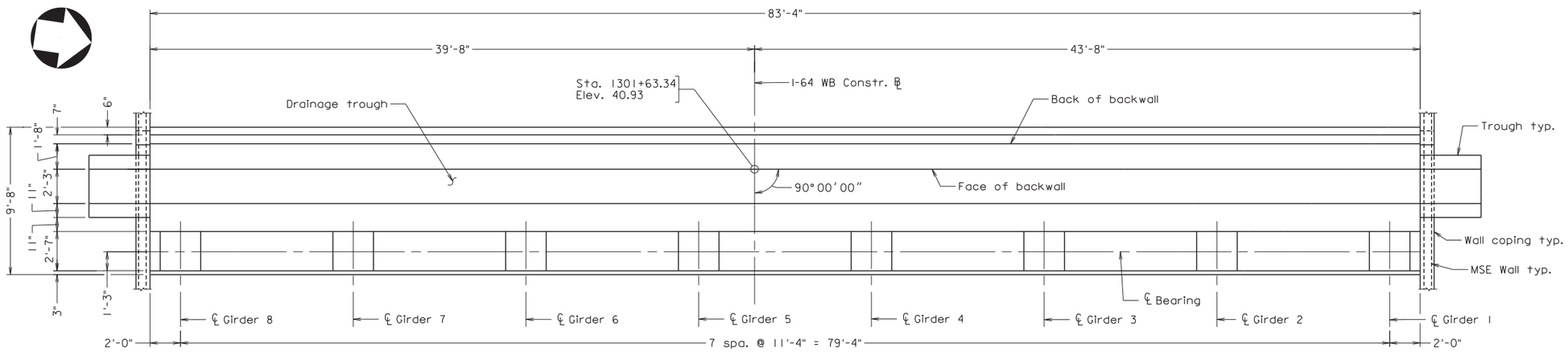

PLAN

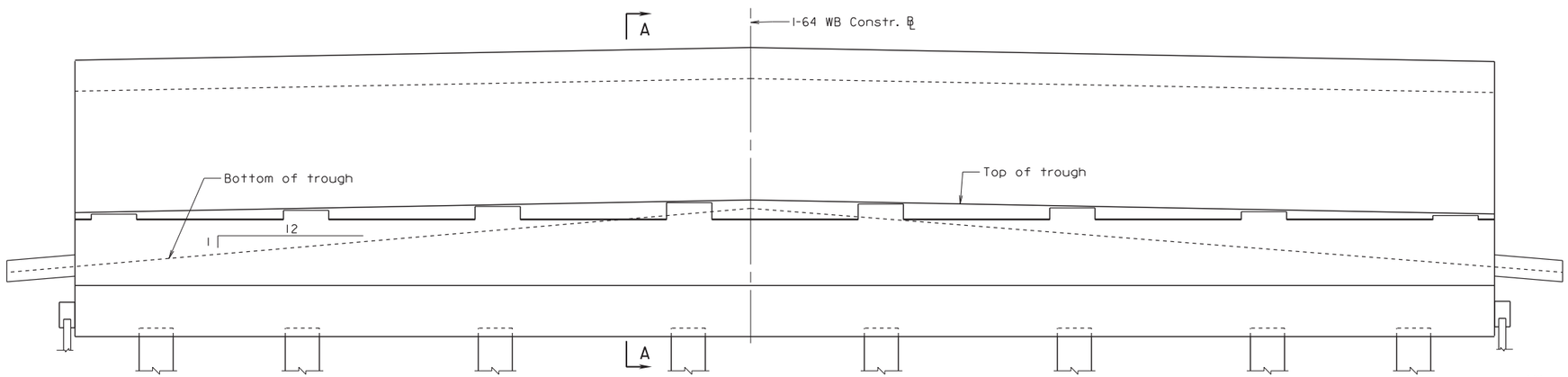

ELEVATION

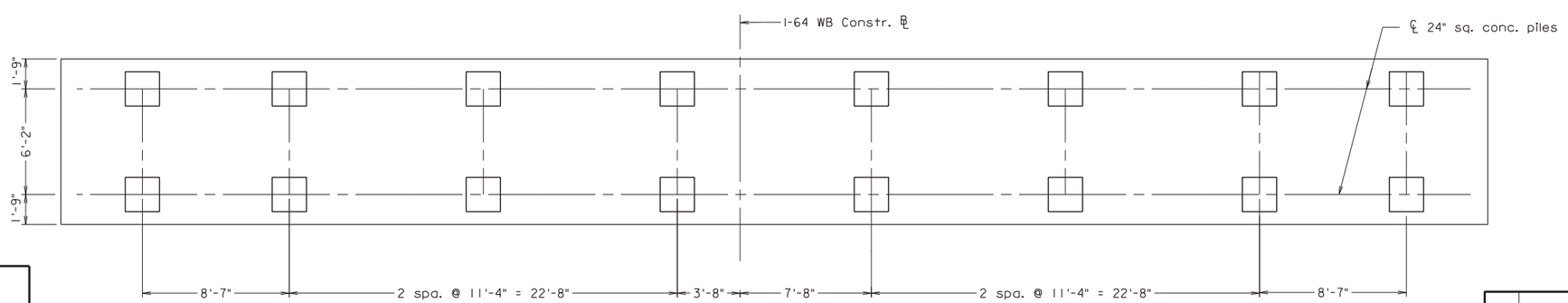

PILE LAYOUT

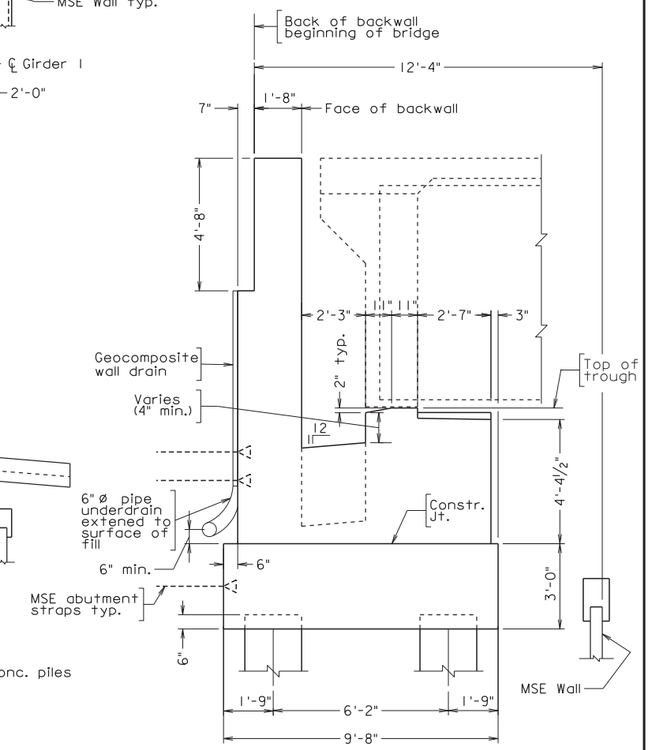

SECTION A-A

Scale: ⅜" = 1'-0"

PRELIMINARY PLANS

THESE PLANS NOT TO BE USED FOR CONSTRUCTION OF BRIDGE

No.	Description	Date

Revisions

COMMONWEALTH OF VIRGINIA
DEPARTMENT OF TRANSPORTATION

STRUCTURE AND BRIDGE DIVISION

ABUTMENT A

Designed: AMG	Date	Plan No.	Sheet No.
Drawn: MTW	Nov 2017		09 of 15
Checked: TAK			

PARSONS TRANSPORTATION GROUP INC. OF VIRGINIA
FAIRFAX, VIRGINIA
BRIDGE ENGINEER

Scale 1/4" = 1'-0" unless otherwise noted

© 2017, Commonwealth of Virginia

11/13/2017 4:23:19 PM b106692.007-HR.dgn

FHWA REGION	FEDERAL AID STATE	FEDERAL AID PROJECT	STATE ROUTE	STATE PROJECT	SHEET NO.
3	VA.	NHPP-064-3(488)	64		10

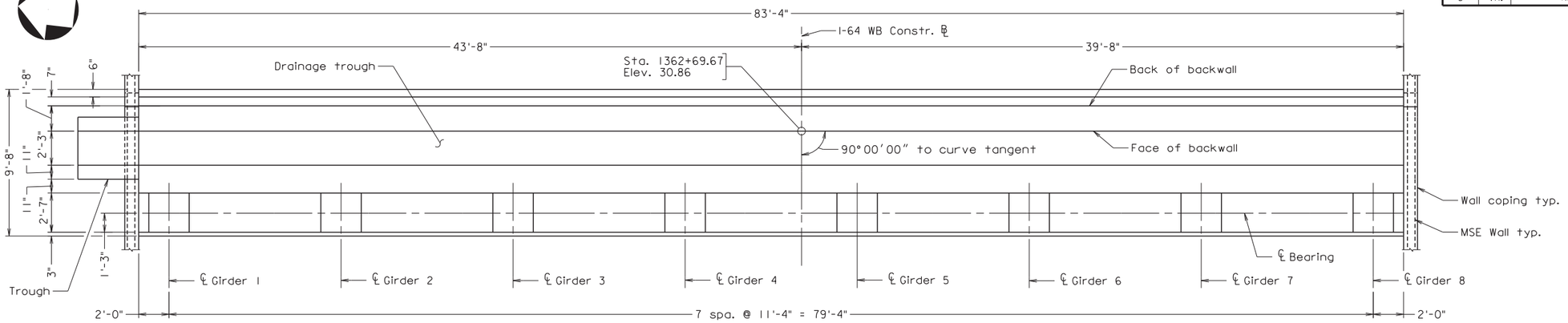

PLAN

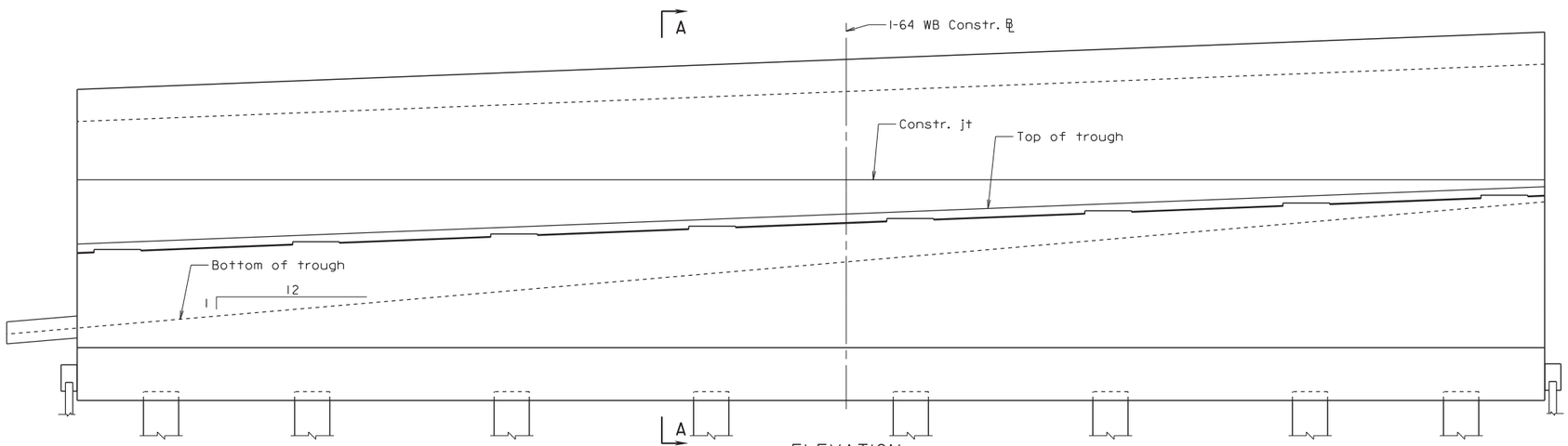

ELEVATION

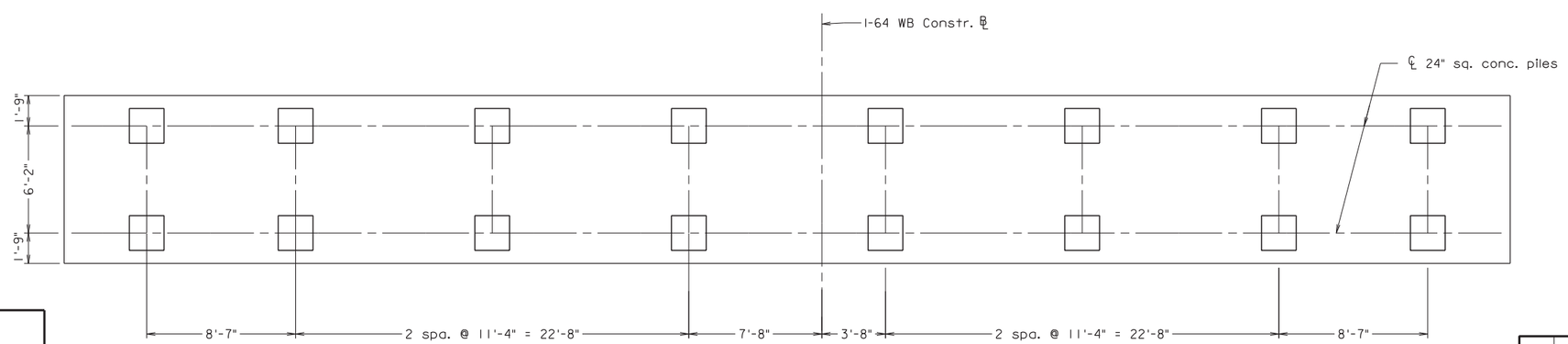

PILE LAYOUT

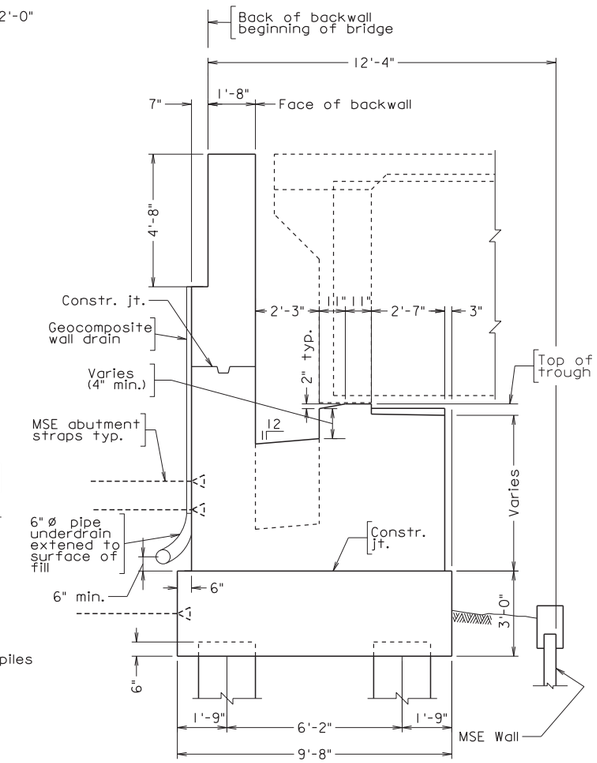

SECTION A-A

Scale: 3/8" = 1'-0"

PRELIMINARY PLANS

THESE PLANS NOT TO BE USED FOR CONSTRUCTION OF BRIDGE

No.	Description	Date

Revisions

COMMONWEALTH OF VIRGINIA
DEPARTMENT OF TRANSPORTATION

STRUCTURE AND BRIDGE DIVISION

ABUTMENT B

Designed: AMG
Drawn: MTW
Checked: TAK

Date	Plan No.	Sheet No.
Nov 2017		10 of 15

PARSONS TRANSPORTATION GROUP INC. OF VIRGINIA
FAIRFAX, VIRGINIA
BRIDGE ENGINEER

Scale 1/4" = 1'-0" unless otherwise noted

© 2017, Commonwealth of Virginia

b106692_008-HR.dgn 4:26:20 PM 11/13/2017

FHWA REGION	FEDERAL AID STATE	FEDERAL AID PROJECT	STATE ROUTE	STATE PROJECT	SHEET NO.
3	VA.	NHPP-064-3(488)	64	0064-131-811, B662	15

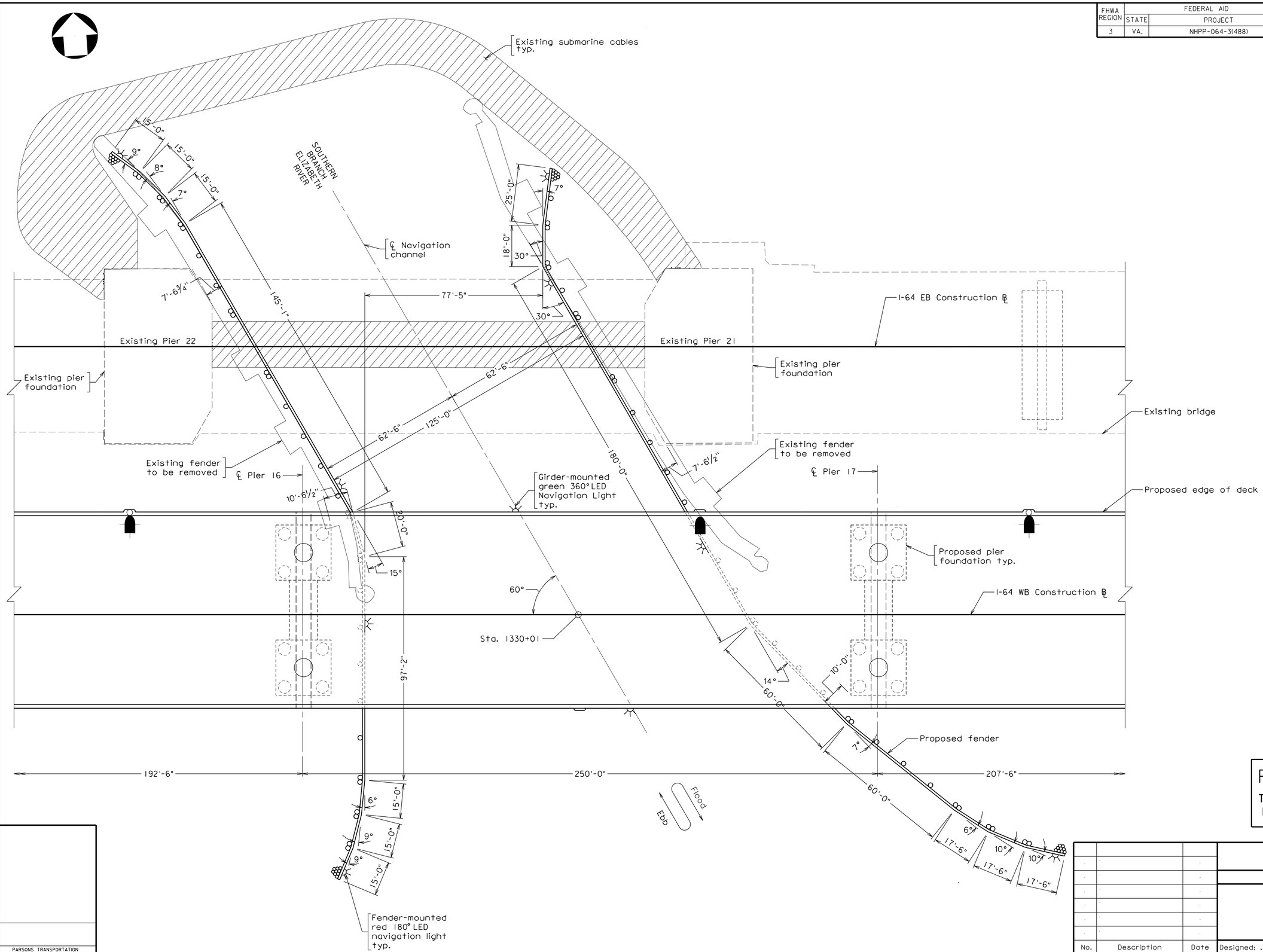

Scale: 1" = 20'

© 2018, Commonwealth of Virginia

PRELIMINARY PLANS

THESE PLANS NOT TO BE USED FOR CONSTRUCTION OF BRIDGE

No.	Description	Date

Revisions

COMMONWEALTH OF VIRGINIA
DEPARTMENT OF TRANSPORTATION

STRUCTURE AND BRIDGE DIVISION

FENDER LAYOUT

Designed: TAK
Drawn: MTW
Checked: AMC

Date	Plan No.	Sheet No.
Nov 2017		15 of 15

PARSONS TRANSPORTATION GROUP INC. OF VIRGINIA
FAIRFAX, VIRGINIA
BRIDGE ENGINEER

b106692_030-HR.dgn
7:58:55 AM
1/10/2018

FHWA REGION	FEDERAL AID STATE	FEDERAL AID PROJECT	STATE ROUTE	STATE PROJECT	SHEET NO.
3	VA.	NHPP-064-3(488)	64	0064-131-811, B662	14

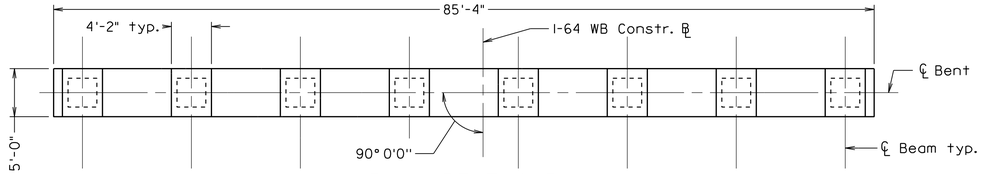

PLAN BENT CAP

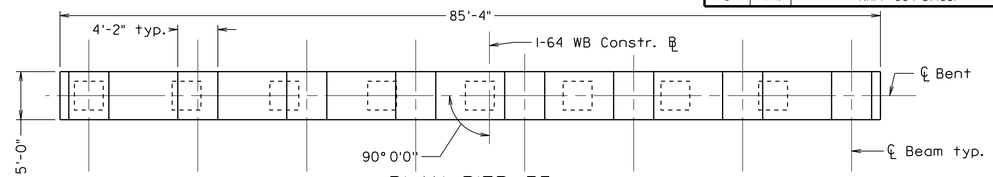

PLAN PIER 35

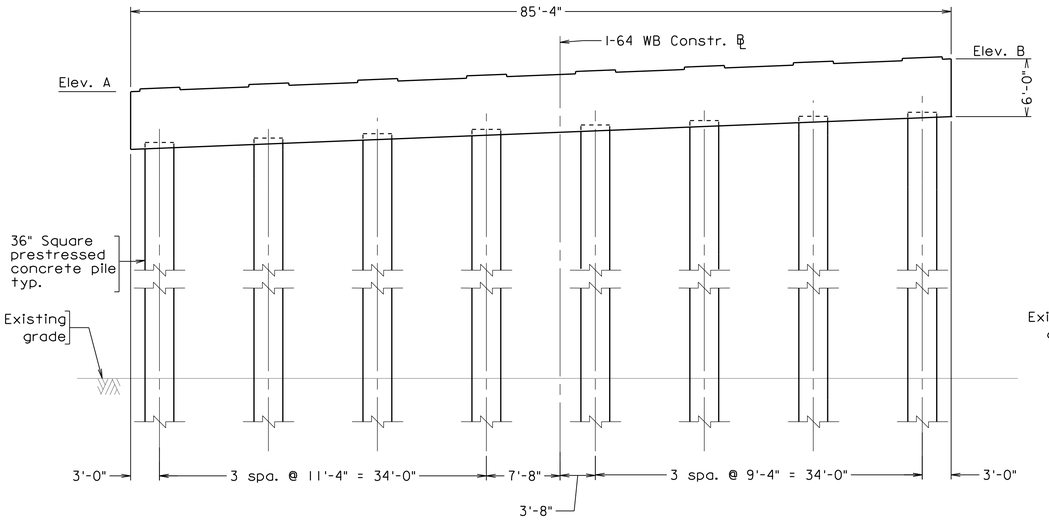

ELEVATION BENTS 1 THRU 3, 32 AND 33

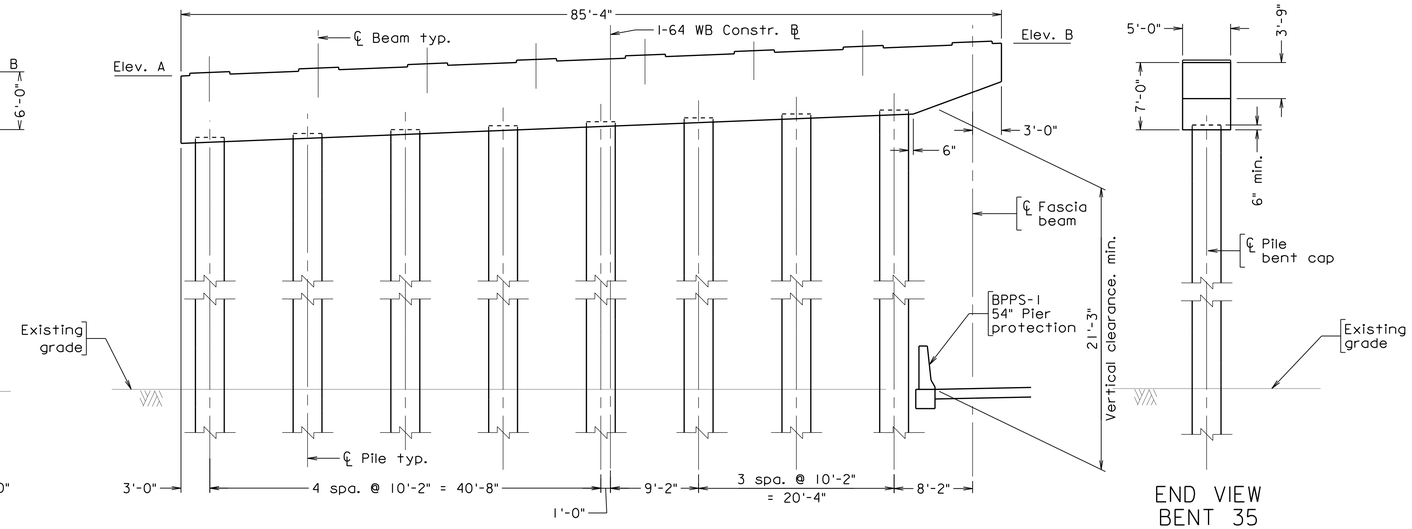

ELEVATION BENT 35

END VIEW BENT 35

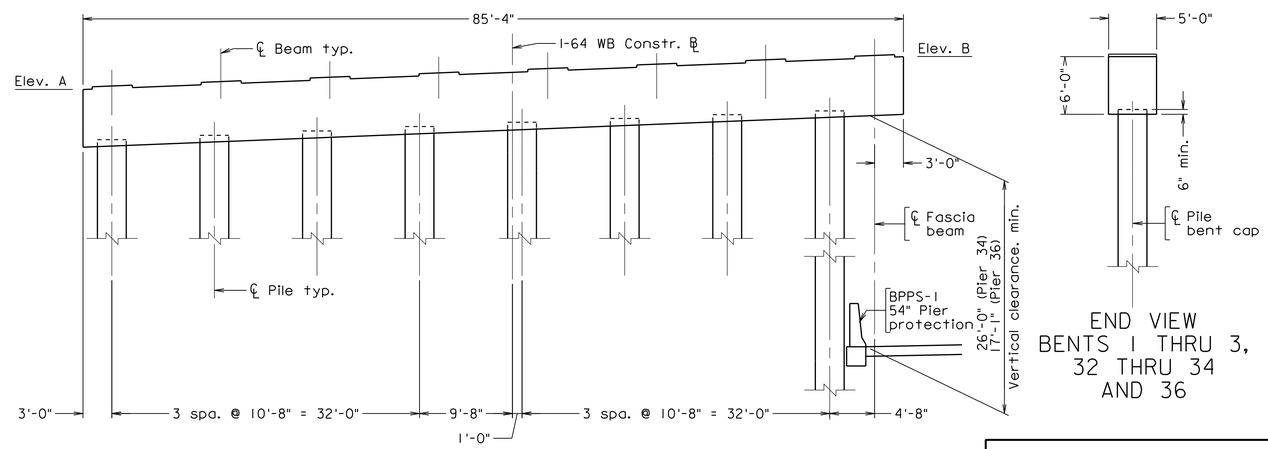

ELEVATION BENTS 34 AND 36

END VIEW BENTS 1 THRU 3, 32 THRU 34 AND 36

TOP OF BENT CAP		
Location	Elev. A	Elev. B
Pier 1	36.16	36.24
Pier 2	40.29	40.37
Pier 3	44.41	44.49
Pier 32	42.07	45.49
Pier 33	37.58	40.99
Pier 34	33.08	36.20
Pier 35	28.59	32.00
Pier 36	24.09	27.51

PRELIMINARY PLANS

THESE PLANS NOT TO BE USED FOR CONSTRUCTION OF BRIDGE

Scale: 1/8" = 1'-0" unless otherwise noted

© 2017, Commonwealth of Virginia

No.	Description	Date
	Revisions	

COMMONWEALTH OF VIRGINIA
DEPARTMENT OF TRANSPORTATION

STRUCTURE AND BRIDGE DIVISION

PIER BENTS 1-3 AND 32-36 TYPE PILE BENT

Designed: AMG
Drawn: MTW
Checked: AK

Date	Plan No.	Sheet No.
Nov 2017		14 of 15

PARSONS TRANSPORTATION GROUP INC. OF VIRGINIA
FAIRFAX, VIRGINIA
BRIDGE ENGINEER

1/9/2018 9:40:57 AM b106692_X13-HR.dgn